Linear XTR H2 DV™

Acclaim™

PROJECT	FIRM	ORDER #	TYPE	QTY

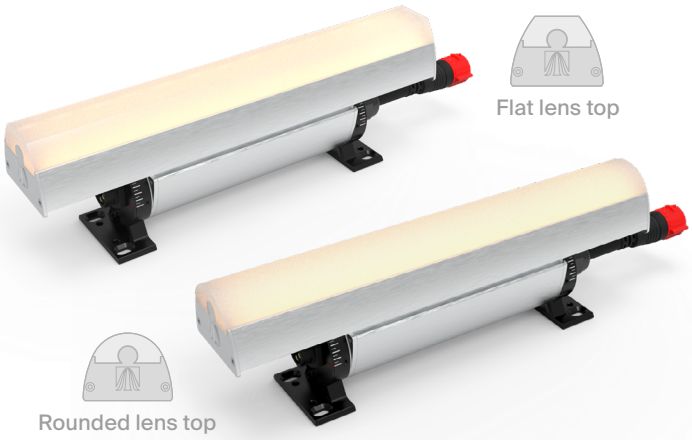

Linear XTR H2 Direct View™ fixtures are designed to be visible and are precision engineered to deliver long runs of all-weather high-output linear illumination. When powered by standard mains (100 to 277VAC) they can achieve daisy-chained runs of up to 100 feet (30m). However, when supplied by an optional XTR Driver, the maximum length of a single daisy-chained run can be raised to 180 feet (55m).

Available in both 1' and 4' lengths, there are also numerous emitter color and power options. The custom diffused lens homogenizes the emitter output beautifully without adversely affecting brightness.

Control is achieved using the industry standard DMX-512A format, with RDM for configuration. DALI and 0-10V control inputs can also be used when optional XTR Drivers are used.

At a glance

Optics

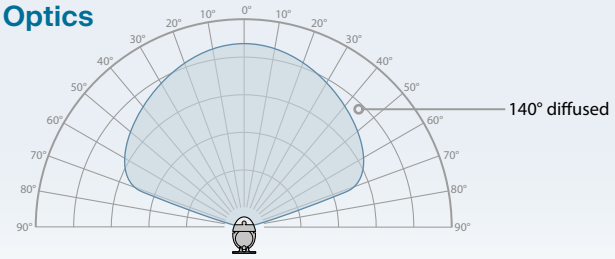

Emitters

Fixed White (2200K, 2400K, 2700K, 3000K, 3500K or 4000K) *or* **Dynamic White (DW)** (2400K to 5500K) *or* **Q RGBL** with ***CCT Select*** (1800K to 6000K) *or* **Q RGBW** (W=2200K, 3000K, 3500K, 4000K or 6000K) *or* **Q RGBA**

Power

100 to 277VAC 50/60Hz | 380VDC via XTR Driver

Temperature

-40° F to 131° F
-40° C to 55° C

Protection

Ingress: IP66
Impact: IK10
Vibration: 3G

Output

Up to **1,653 lumens** per linear foot

Core technologies

SpectrumFour technology · Ai Dim technology · XTRLink technology · ColorDrive technology

Configure your product

XD2H-2 ___ - ___ N

Example final code: ***XD2H-241-DNEE***

Finish:
1 = Black (RAL 9005)
2 = White (RAL 9003)
4 = Aluminum
7 = Custom (RAL #)

Lens top:
1 = Flat
2 = Rounded

Length:
A = 1' (305mm)
D = 4' (1220mm)

Emitters:
B = 2200K
C = 2400K
D = 2700K
E = 3000K
F = 3500K
G = 4000K
X = DW (2400K - 5500K)
L = Q RGBL (Quad RGBL)
K = QW22 (RGBW, W=2200K)
Q = QW3 (RGBW, W=3000K)
O = QW35 (RGBW, W=3500K)
R = QW4 (RGBW, W=4000K)
S = QW6 (RGBW, W=6000K)
T = Q RGBA (Quad RGBA)

Fixture spacing:
E = End-to-end spacing for straight runs
C = Larger spacing for angled runs

see page 9

SCAN FOR PRODUCT PAGE

PROJECT	FIRM	ORDER #	TYPE	QTY

Specifications

Emitters	2200K, 2400K, 2700K, 3000K, 3500K, 4000K, DW (2400K-5500K), Quad-color (Spectrum 4) RGBW (W=2200K, 3000K, 3500K, 4000K or 6000K), RGBL or RGBA
Optics	140°
Output	Up to 1,653 lumens/ft (4000K)
Lumen maintenance	L_{70} 150,000 hours (@ 25° C)
Control	0-100% dimming via wired DMX (with RDM configuration). 0-10V and DALI via XTR Driver *Single color models will default to 100% (on/off) output if the control input is absent (see page 13)*
Control resolution	6" or 12" section control, selectable via RDM (see page 10)
Maximum fixtures in series	Up to 180' (55m) via XTR Driver 4000 /8000 (see page 13)
Housing lengths	1' (305mm) or 4' (1220mm)
Operating voltage	100-277VAC, 50/60Hz direct or 380VDC via XTR Driver 4000/8000 (200-300VAC input to XTR Driver)
Power consumption	**1'**: 22W **4'**: 88W
Connection	Composite IP67-rated input and output connectors. All cables are NEC compliant
Mounting	Two built-in ratcheted (tool-free) swivel mount brackets. Optional snap-in cable covers
Material/finish	Aluminum body with frosted PMMA top lens. Finishes include aluminum, black (RAL 9005), white (RAL 9003) or custom colors (provide RAL #). Optional marine coating available
Ambient temperature range	-40° F to 131° F (-40° C to 55° C)
Ingress protection	IP66, wet location
Impact protection	IK10, protection against 20 joule impact (40cm distance)
Vibration protection	ANSI C136.31, 3G-rated for high vibration and bridge applications
Warranty	5 years, limited
Weight	**1'**: 3.19 lbs (1.45 kg) **4'**: 10.25 lbs (4.65 kg)
Certifications	Intertek, FC, CE, 3G LUMINAIRE VIBRATION, RoHS COMPLIANT

Photometrics

For all available IES files, please visit acclaimlighting.com/linear-xtr-h2-direct-view

Emitters	Lumens (/ft)	Efficacy (lm/W)	Center Candela
2700K	1,465	66.6	-
3000K	1,562	71.0	-
3500K	1,580	71.8	-
4000K	1,653	75.0	424
DW	1,347	61.2	-
RGBW (W=3000K)	1,002	45.5	-
RGBW (W=4000K)	998	45.3	-
RGBW (W=6000K)	1,012	46.0	-
RGBA	859	39.0	-

PROJECT	FIRM	ORDER #	TYPE	QTY

Related components

XTR Drivers (optional for extended run lengths)

- Power input: 200 to 300VAC
- Control input: DMX/RDM, 0-10V sink or DALI

XTR Driver 4000

- Up to 4000W power consumption
- Maximum of 1x 180' Linear XTR H2 run*

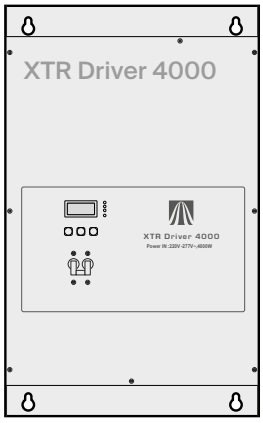

Part # **XTR Driver 4000**

XTR Driver 8000

- Up to 8000W power consumption
- Maximum of 2x 180' Linear XTR H2 runs*

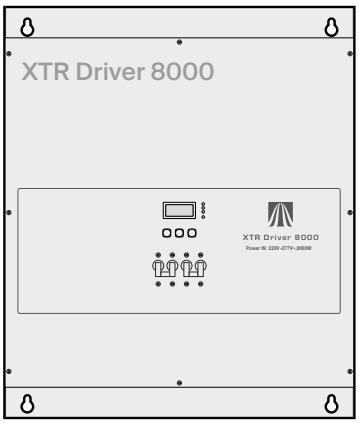

Part # **XTR Driver 8000**

** All fixtures controlled within a single DMX universe*

Test and configuration tool kit

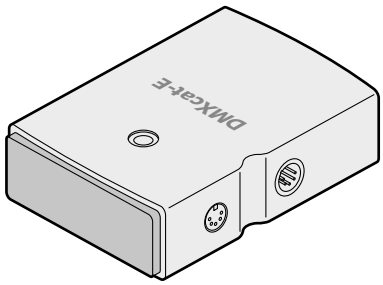

DMX/RDM, ArtNet, sACN, SMPTE LTC and Midi test/configuration tool **DMXcat-E**

Mounting accessories

Snap-in cable covers

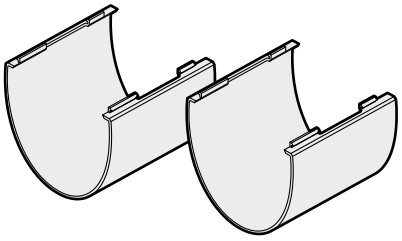

2 pcs **XT2HCCS**

SCAN FOR PRODUCT PAGE

PROJECT | FIRM | ORDER # | TYPE | QTY

Related components

Feed cables (inc terminator)

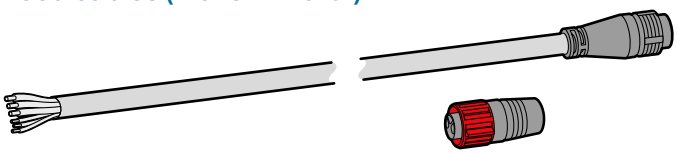

10' (3m)	**XT2FC10**
50' (15m)	**XT2FC50**
100' (30m)	**XT2FC100**

Terminator (end cap)

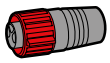

Terminator **XT2ECT**

Link cables

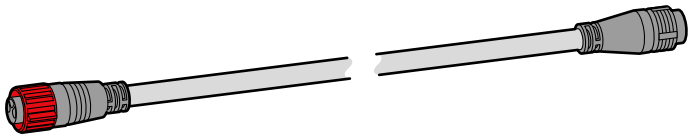

6" (15cm)	**XT2LC0.5**
1' (30cm)	**XT2LC1**
5' (1.5m)	**XT2LC5**
10' (3m)	**XT2LC10**
50' (15m)	**XT2LC50**
100' (30m)	**XT2LC100**

Signal protocol converters *(see page 11)*

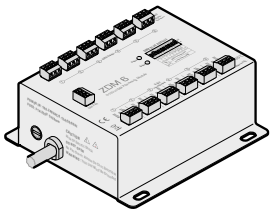

0-10V multiple channel converter **ZDM 6**

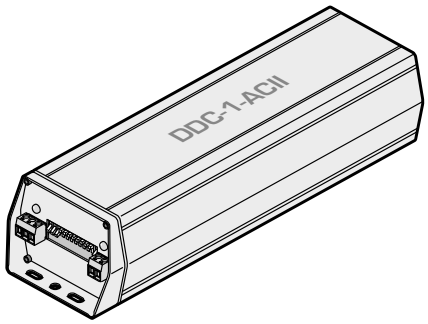

DALI 2, DT6 and DT8 64-channel converter **DDC 1 AC**

AJBOX (IP66) junction box plus outlet cable gland

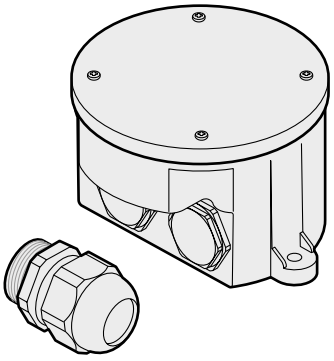

Part # **AJBOX1**

IP66 NEC compliant high and low voltage junction box
½" conduit inputs for AC + DMX, ¾" conduit for XT2FC#
Built-in AC surge protection up to 10kV & 10kA
Suitable for 120-277VAC runs. Not certified for use with XTR Drivers

AJBOX1 Extended (IP66) junction box

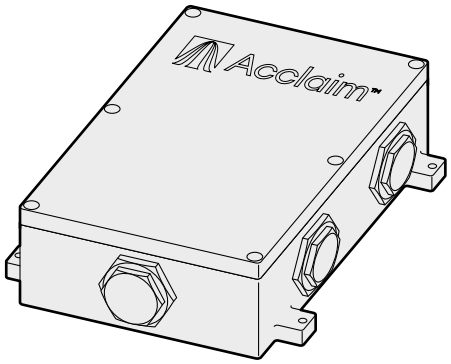

Part # **AJBOX1E#** *(# = color)*

IP66 NEC-compliant high and low voltage junction box with six sealed NPT ¾" access ports for conduit fixtures or cable glands (by others) for power and control plus XT2FC# feed cable. Built-in AC surge protection up to 10kV and 10kA. Suitable for 120-277VAC runs. Not certified for use with XTR Drivers

PROJECT	FIRM	ORDER #	TYPE	QTY

Dimensions

Linear XTR H2 DV - flat lens top

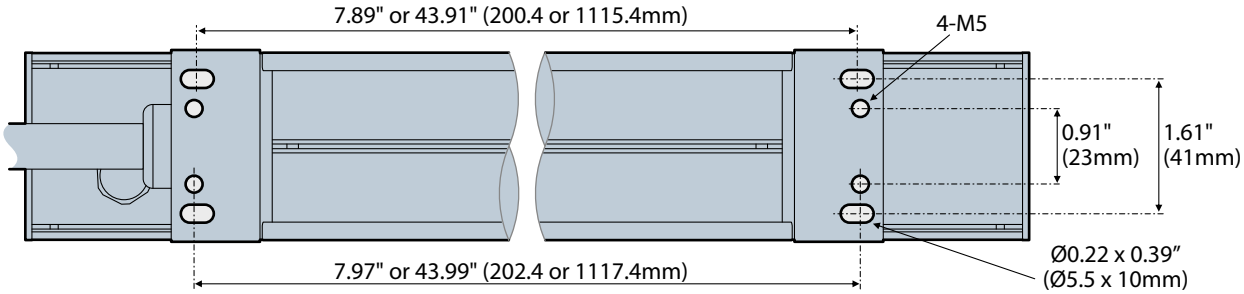

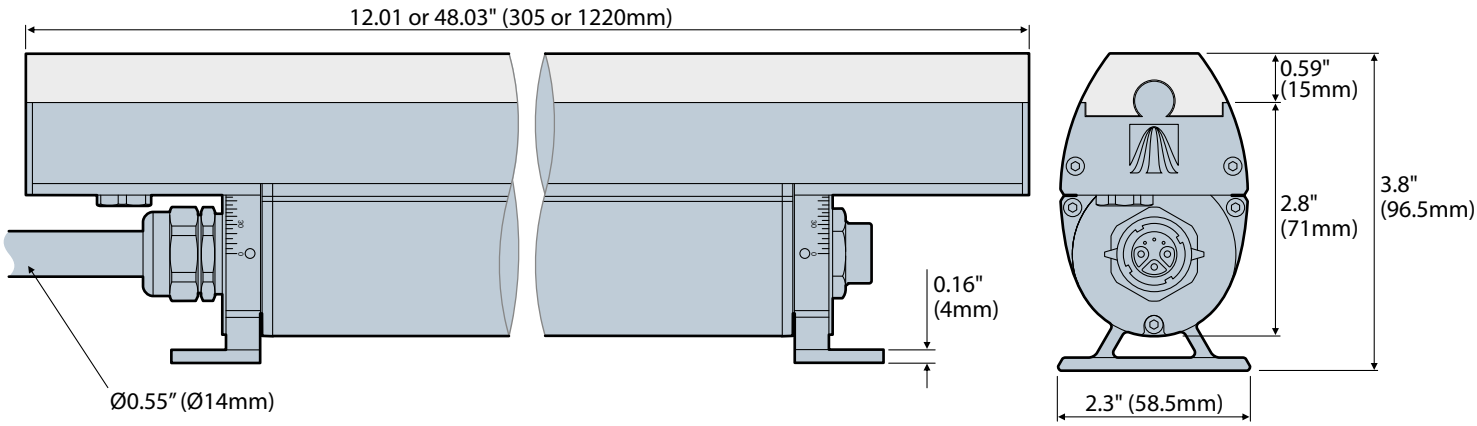

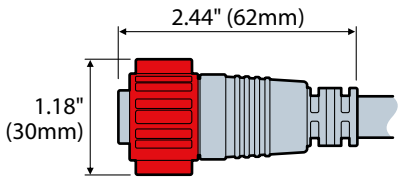

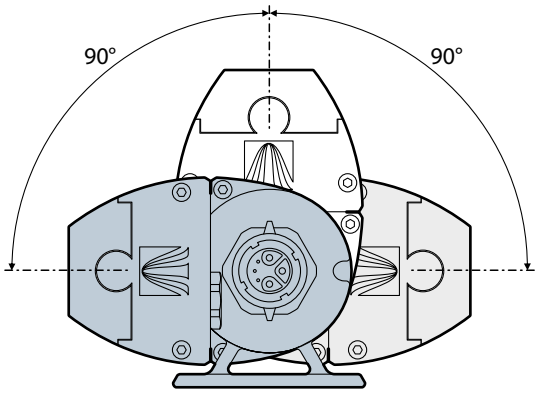

SCAN FOR PRODUCT PAGE

PROJECT	FIRM	ORDER #	TYPE	QTY

Dimensions

Linear XTR H2 DV - rounded lens top

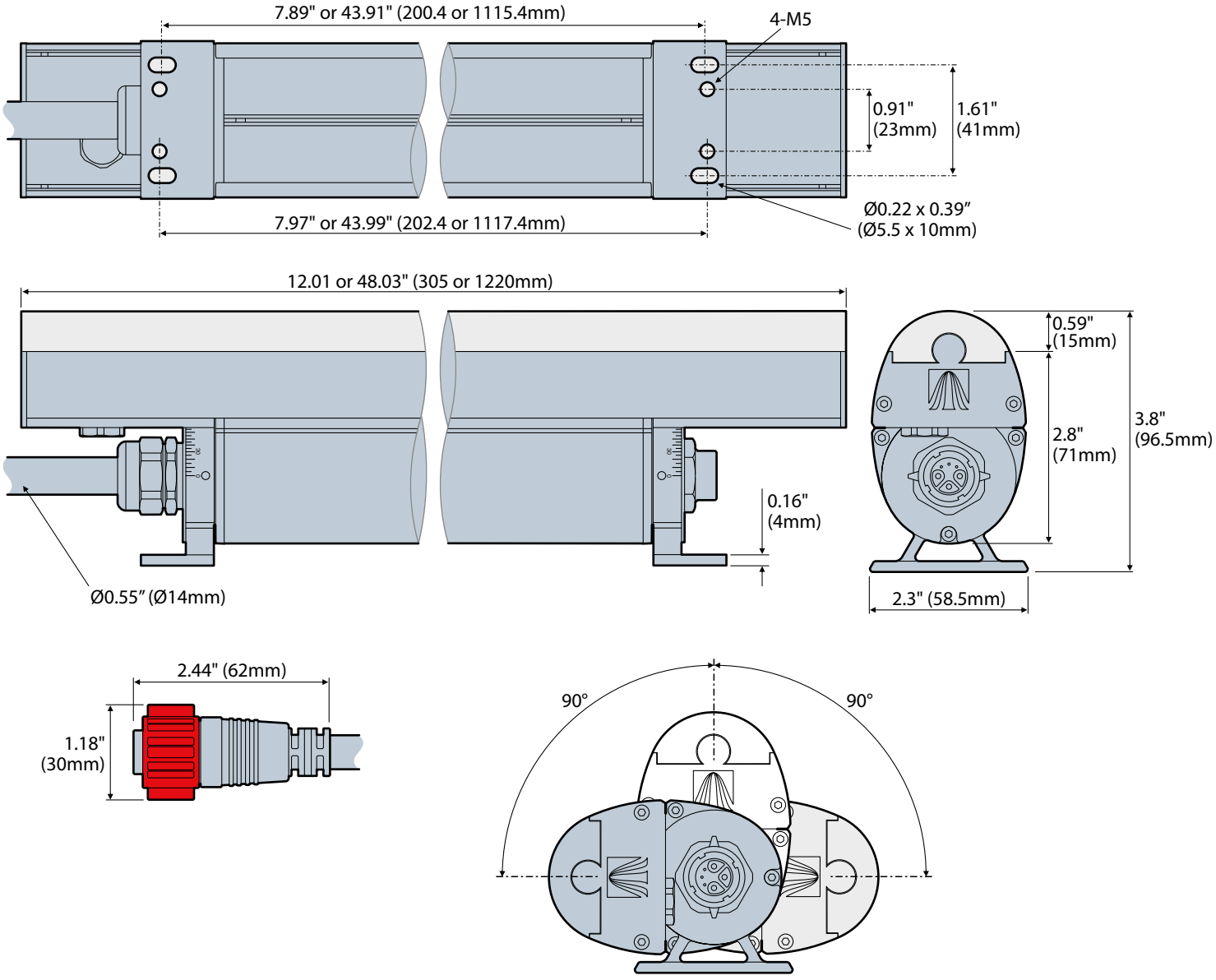

SCAN FOR PRODUCT PAGE

PROJECT | FIRM | ORDER # | TYPE | QTY

Dimensions

Cables

Feed cable

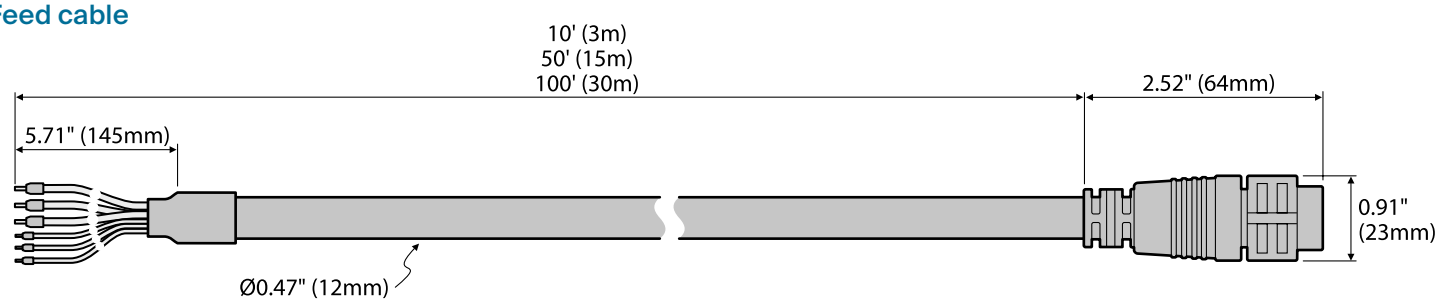

Link cable

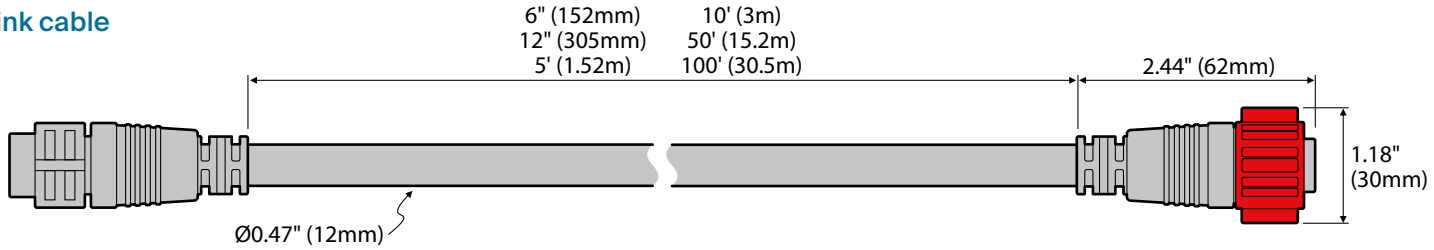

Terminator (end cap)

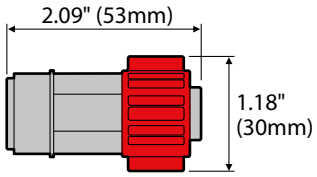

SCAN FOR PRODUCT PAGE

PROJECT | FIRM | ORDER # | TYPE | QTY

Dimensions

AJBOX1

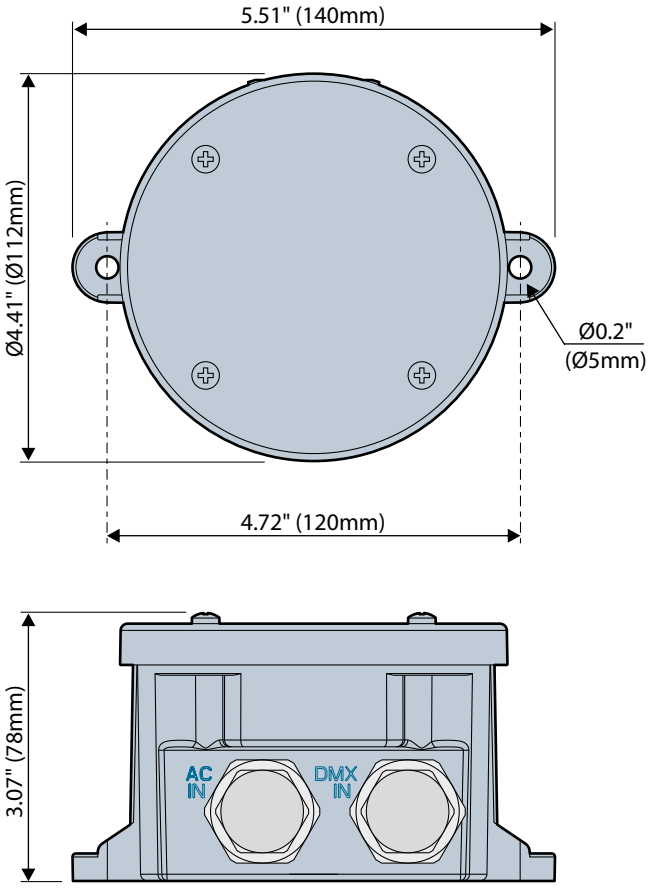

AJBOX1 Extended

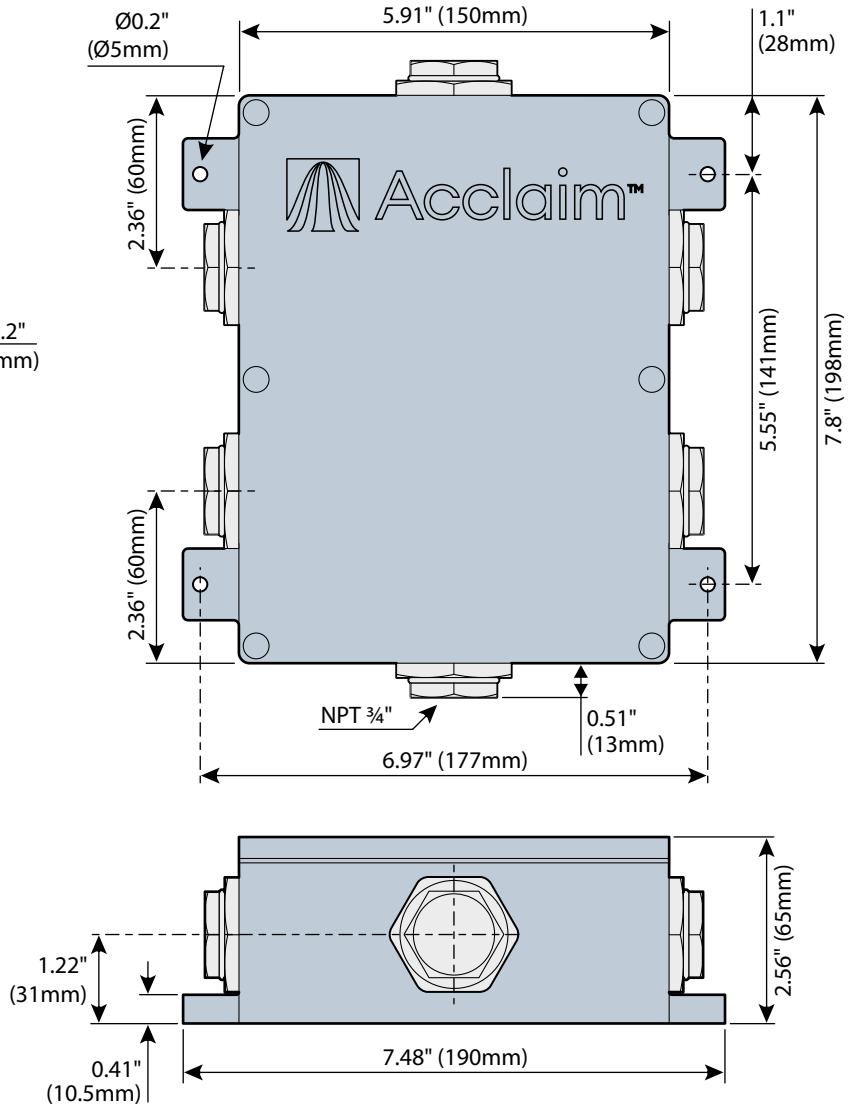

SCAN FOR PRODUCT PAGE

PROJECT	FIRM	ORDER #	TYPE	QTY

Fixture spacing

Linear XTR H2 DV fixtures are available with two different spacing arrangements; the one to choose depends on how your fixture runs will be laid out: straight or angled.

End-to-end spacing for straight runs (option E)

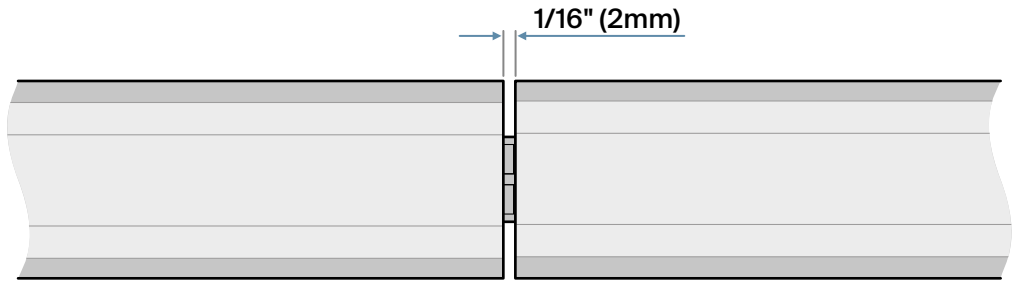

Larger spacing for angled runs (option C)

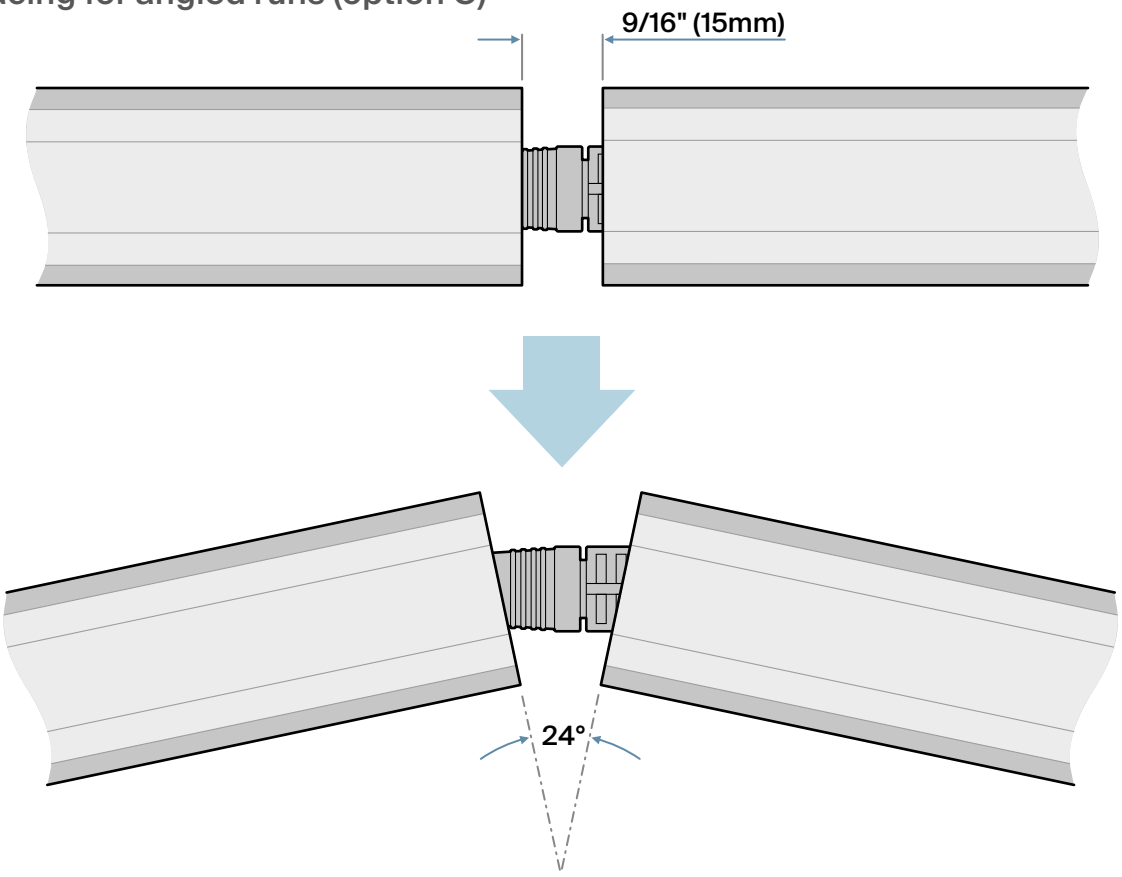

SCAN FOR PRODUCT PAGE

PROJECT | FIRM | ORDER # | TYPE | QTY

CCT Select color mixing

Linear XTR H2 DV fixtures fitted with RGBL (QL) emitters allow you to mix saturated and pastel colors in addition to calling up any color temperature of white (using a dedicated DMX control channel). The special mode uses six channels to provide full control over the RGBL emitters.

Mixing saturated and pastel colors individually

Use DMX channels 1 to 4 to mix the required shade.

Use channel 6 to determine the overall output intensity.

*Note: **Channel 5** must be at **zero**.*

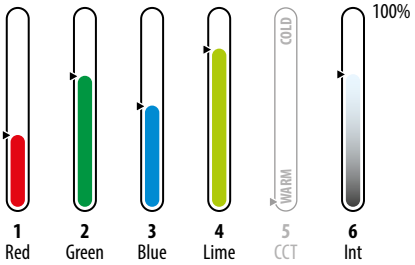

Choosing a temperature of white

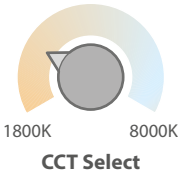

Use DMX channel 5 to select the required correlated color temperature (CCT) ranging from 1800K (at 1%) to 8000K (at 100%).

Use channel 6 to control the overall output intensity.

Note: When channel 5 receives any value other than zero, the input values of channels 1 to 4 will be ignored.

Note: A full list of DMX values for each color temperature are provided in the Linear XTR user guide.

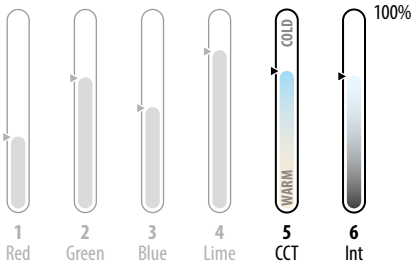

DMX value	Color temp
0	Off
001-004	1800K
005-008	1900K
009-012	2000K
013-016	2100K
017-020	2200K
-	-
-	-
233-236	7600K
237-240	7700K
241-245	7800K
246-250	7900K
251-255	8000K

Single channel tungsten emulation

(Ai Dim to Warm)

In addition to the multi-channel control modes mentioned above, Linear XTR H2 DV fixtures fitted with RGBL (QL) emitters also offer a simple one channel option. As the single channel is raised from zero to 100% and back to zero, the fixture responds with combined graduations of both intensity and color temperature to skilfully emulate the dimming response of a typical high-output tungsten source.

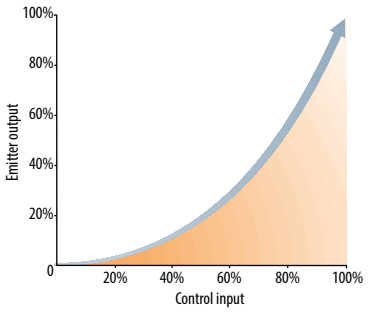

Ai Dim technology

Split section control

To provide greater visual granularity, Linear XTR H2 DV fixtures feature a split section mode where each linear foot cell is divided into two separately controllable regions.

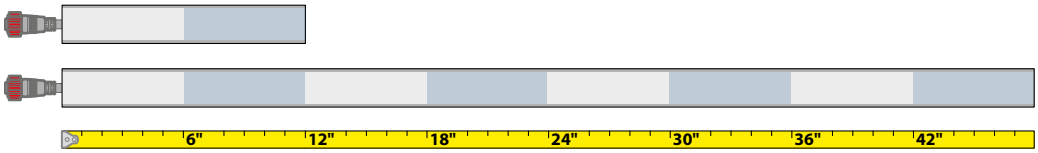

PROJECT | FIRM | ORDER # | TYPE | QTY

Using other control inputs

Linear XTR H2 DV fixtures use DMX as their native control method, however, it is possible to use other common control protocols when required, such as 0-10V (source or sink) or DALI.

Control inputs via converters

- DMX - connect a DMX input directly to the feed cable.
- 0-10V - use an Acclaim Lighting ZDM 6 to convert one or more analog control feeds into a combined DMX feed.
- DALI - use an Acclaim Lighting DDC-1-AC to convert one or more DALI channels into a combined DMX feed.

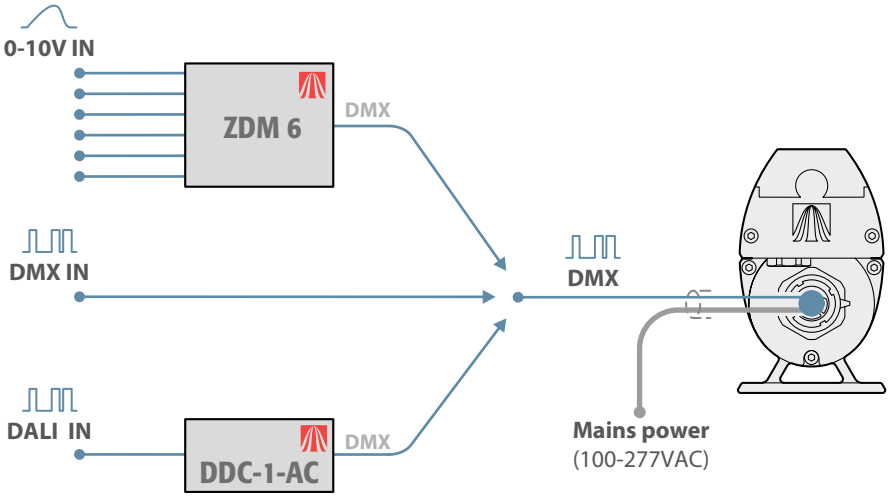

When using Acclaim Lighting ZDM 6 or DDC-1-AC modules it is possible to convert multiple inputs into separate DMX channels within a consolidated feed - thus allowing multiple Linear XTR H2 DV fixtures to be uniquely addressed. The ZDM 6 can convert up to six 0-10V inputs into DMX channels, whereas the DDC-1-AC can convert a maximum of 64 DALI channels (although large numbers of channels are not recommended due to the timing limitations of the DALI standard).

Control inputs via an XTR Driver

The XTR Driver 4000 and 8000 units can accept DMX, 0-10V or DALI control inputs directly. The latter two methods are converted within the driver before being transmitted as DMX within the consolidated output, together with the high voltage XTR power.

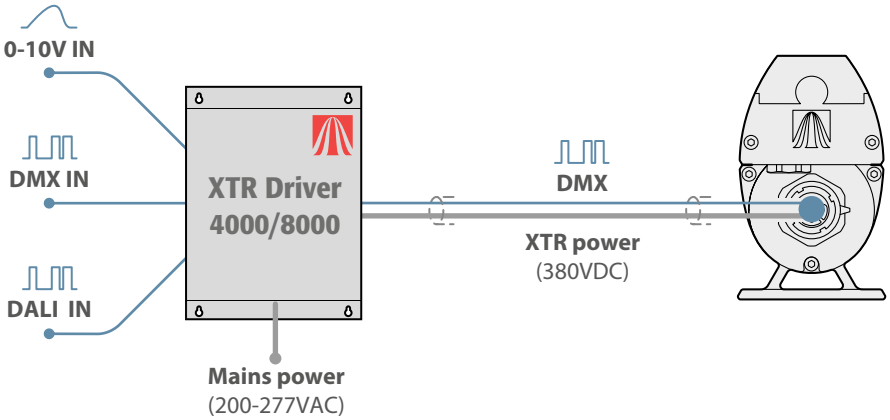

When using an XTR Driver, the internal conversion supports either a single 0-10V feed or a single 'broadcast' DALI channel - meaning that all Linear XTR H2 DV fixtures will use the same single control address. To benefit from multiple channels, use a ZDM 6 or DDC-1-AC to externally convert signals (see above).

SCAN FOR PRODUCT PAGE

PROJECT | FIRM | ORDER # | TYPE | QTY

Unique addressing under DMX control

1’ (305mm) Linear XTR H2 DV

Emitter options	DMX channels used: Cell 1	Total channels per fixture	Maximum unique fixtures
W	1	**1**	**512**
DW	2	**2**	**256**
RGBW/A	4	**4**	**128**

4’ (1220mm) Linear XTR H2 DV (operating in ‘1 Group’ mode)

Emitter options	DMX channels used: All cells combined	Total channels per fixture	Maximum unique fixtures
W	1	**1**	**512**
DW	2	**2**	**256**
RGBW/A	4	**4**	**128**

4’ (1220mm) Linear XTR H2 DV (operating in ‘4 Group’ mode)

Emitter options	DMX channels used: Cell 1	Cell 2	Cell 3	Cell 4	Total channels per fixture	Maximum unique fixtures
W	1	1	1	1	**4**	**128**
DW	2	2	2	2	**8**	**64**
RGBW/A	4	4	4	4	**16**	**32**

The maximum number of fixtures that can be uniquely addressed in a run is determined by the length, emitter type and operation mode of each linear fixture, as summarized in the tables shown here.

Additionally, any number of fixtures in a run can be configured to use duplicate control addresses, as required.

Important cabling considerations

- Wherever possible, XTR cable runs should be positioned to make them beyond normal reach within any installation.
- For long cable runs, external runs and in areas where public contact and/or accidental damage is possible, the XTR cabling should be contained within protective conduit. Minimum spec: 1-1/2” EMT, 1.5” (ID: Ø1.61”, OD: Ø1.74”).
- Ensure that the final fixture in a run has a terminator end cap correctly fitted to its output connection. This will terminate the control signal and also ensure that the power connection is fully sealed.
- Additional power cabling: Where power feeds require non-XTR cabling, the power cores should be 14 AWG minimum.
- Additional DMX control cabling: For initial control runs leading to the XTR cabling, these are recommended:
  - Indoor exposed or inside conduit above grade: Belden 9842
  - Indoor plenum: Belden 82842
  - Outdoor exposed, direct burial, or inside conduit below grade: Belden 3107DB
- Please consult and adhere to all relevant local codes.
- The next page provides details about maximum run lengths for Linear XTR H2 installations. It should be noted that those limits are imposed only by the power characteristics. The length of the DMX control feed to the first XTR H2 fixture could be up to the usual DMX standard limit (3,900 feet/1200m) with appropriate cable choice - although Acclaim Lighting recommends a maximum DMX / RDM control run length of 1,500’ (457m) without buffering.

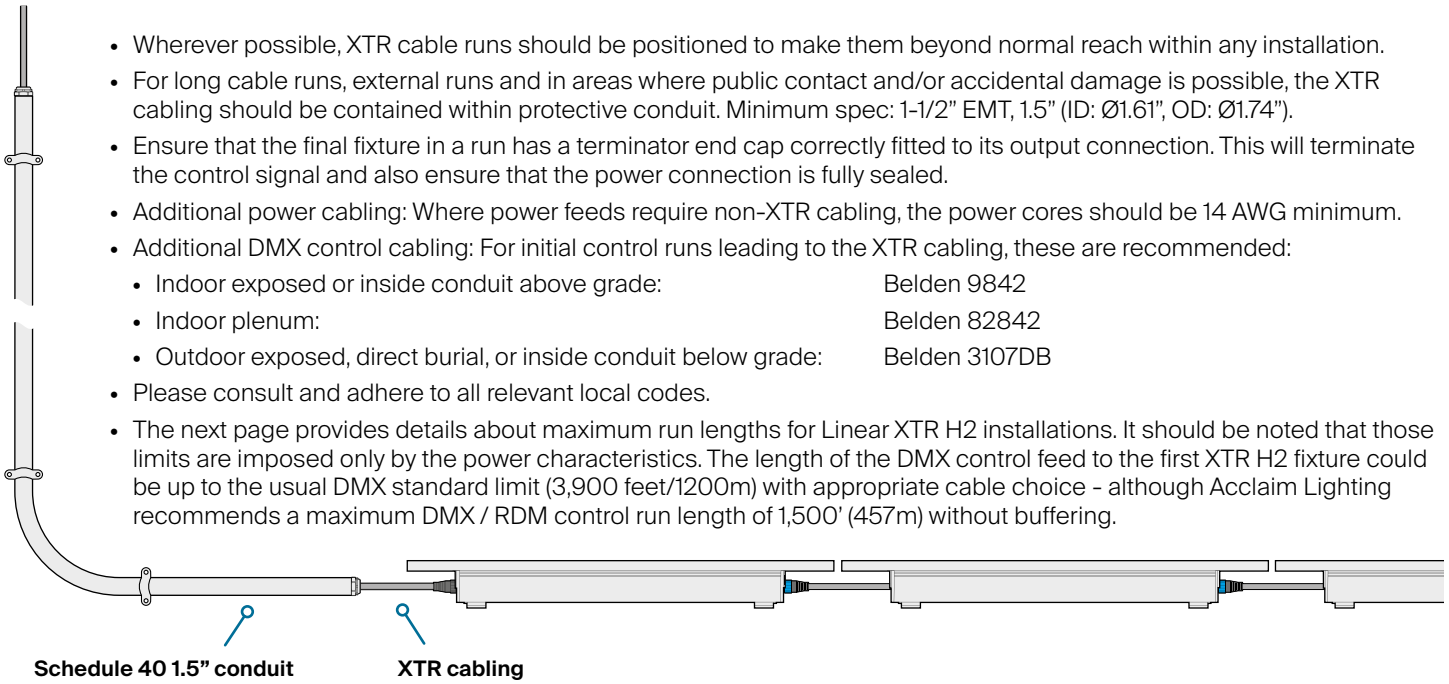

PROJECT | FIRM | ORDER # | TYPE | QTY

Run lengths

Linear XTR H2 fixtures can be fed directly from a suitably protected mains supply (100 to 277VAC 50/60Hz) to provide standard run lengths up to 400' (122m). Alternatively, an Acclaim Lighting XTR Driver can create an increased supply voltage to allow continuous runs up to 700' (213m). *Note: Linear XTR H2 fixtures can use either power method without any reconfiguration; voltage levels are automatically detected.*

Standard run lengths: Mains input plus AJBOX1 and feed cable

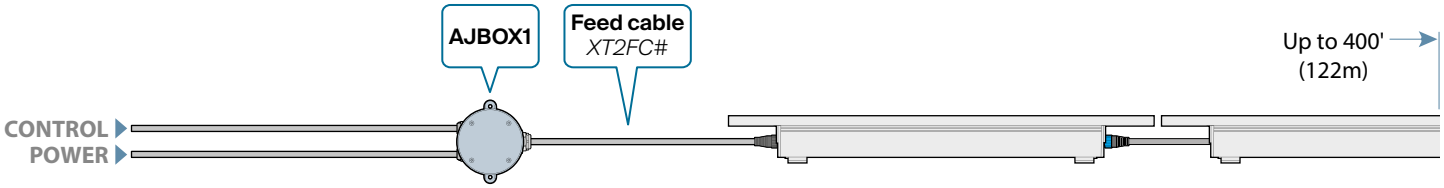

Extended run lengths: XTR Driver plus link cable

XTRLink technology

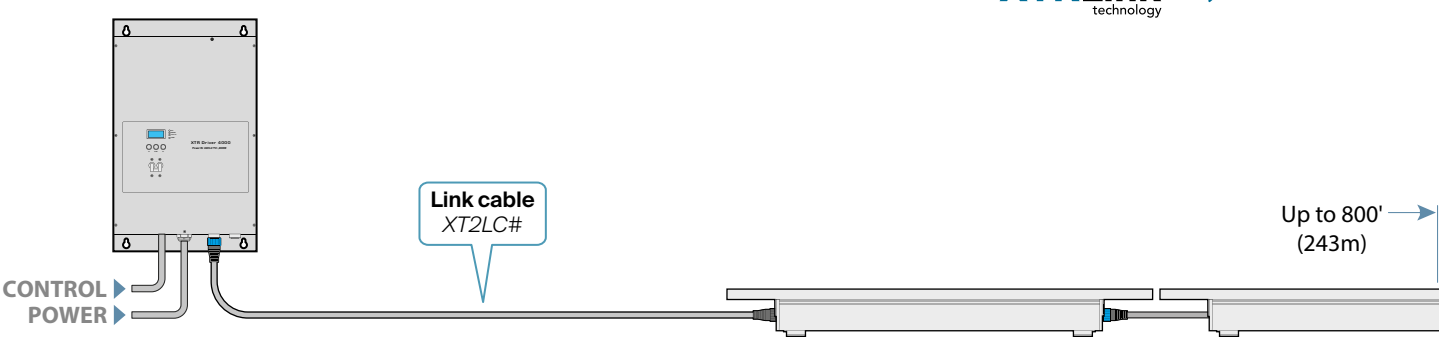

Maximum length of fixtures in a single run

(all fixtures controlled within a single DMX universe)

Power draw	100/120VAC supply	230/277VAC supply	XTR Driver 4000	XTR Driver 8000
22W per foot	50' (15m)	100' (30m)	180' (55m)	2x 180' (55m)

Maximum overall length of a single run (fixtures + all cabling)

(all fixtures controlled within a single DMX universe)

100/120VAC supply	230/277VAC supply	XTR Driver 4000	XTR Driver 8000
200' (61m)	400' (122m)	700' (213m)	2x 700' (213m)

Behaviors if the control signal is lost or not applied

If the DMX control signal is not present while power is applied, the fixtures will respond in the following ways:

- Single color versions - when DMX is lost (or not used), each fixture will go to full output until the control signal is restored. If power is cycled while the control signal is absent, each fixture will remain at full until the signal is restored. If 100% output is required at all times during normal operation, this feature allows the fixtures to be fed with power only, without need for a control input.
- Dynamic white, RGBW, RGBL and RGBA versions - when DMX is lost, each fixture will hold the last received values until the control signal is restored. If power is cycled while the control signal is absent, each fixture will retain the last received values until the signal is restored.

For full installation details, please refer to the **user guide**, available for free download here: