# Linear XTR H2™

Acclaim™

| PROJECT | FIRM | ORDER # | TYPE | QTY |
|---|---|---|---|---|
| | | | | |



*Shown here with optional snap-in cable covers*

**Linear XTR H2™** fixtures are precision engineered to deliver long runs of all-weather linear illumination. When powered by standard mains (100 to 277VAC) they can achieve daisy-chained runs of up to 100 feet (30m). However, when supplied by an optional XTR Driver, the maximum length of a single daisy-chained run can be raised to 180 feet (55m).

Available in both 1' and 4' lengths, there are numerous emitter color and power options together with an extensive range of lens choices. Optional glare shields and louvers allow the light output to be further refined to suit the scene.

Control is achieved using the industry standard DMX-512A format, with RDM for configuration. DALI and 0-10V control inputs can also be used when XTR Drivers or optional converters are employed (see page 12).

## At a glance

### Optics

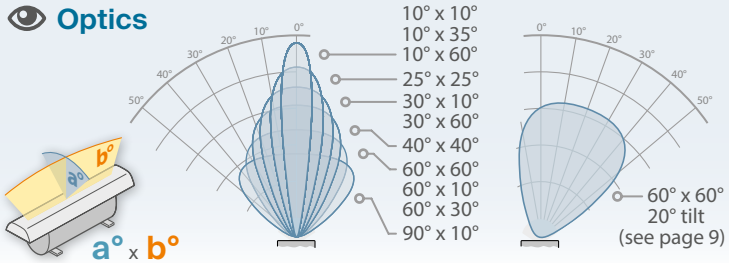


### Emitters

**Fixed White** (2200K, 2400K, 2700K, 3000K, 3500K or 4000K) *or* **Dynamic White (DW)** (2400K to 5500K) *or* **Q RGBL** with ***CCT Select*** (1800K to 6000K) *or* **Q RGBW** (W=2200K, 3000K, 3500K, 4000K or 6000K) *or* **Q RGBA**

### Power

**100** to **277**VAC
**50/60**Hz

**380**VDC via XTR Driver

### Temperature

**-40° F** to **131° F**
**-40° C** to **55° C**

### Protection

Ingress: **IP66**
Impact: **IK08**
Vibration: **3G**

### Output

Up to **1,870 lumens** per linear foot

### Core technologies

SpectrumFour™ technology · Ai Dim™ technology · XTRLink™ technology · ColorDrive™ technology

## Configure your product

**XT2H-2 1-**

*Example final code:* ***XT2H-241-DHQE***

**Finish:**
**1** = Black (RAL 9005)
**2** = White (RAL 9003)
**4** = Aluminum
**7** = Custom (RAL #)

**Length:**
**A** = 1' (305mm)
**D** = 4' (1220mm)

**Optics:**
**C** = 10° x 10°
**F** = 25° x 25°
**H** = 40° x 40°
**I** = 30° x 10°
**J** = 60° x 10°
**K** = 60° x 60°
**L** = 100° x 100°
**T** = Asymmetric Wall Wash Left 60° x 60°, 20° tilt
**X** = Asymmetric Wall Wash Right 60° x 60°, 20° tilt
**U** = 10° x 35°
**R** = 10° x 60°
**Q** = 30° x 60°
**Y** = 60° x 30°
**Z** = 90° x 10°

**Emitters:**
**B** = 2200K
**C** = 2400K
**D** = 2700K
**E** = 3000K
**F** = 3500K
**G** = 4000K
**X** = DW (2400K - 5500K)
**L** = Q RGBL (Quad RGBL)
**K** = QW22 (RGBW, W=2200K)
**Q** = QW3 (RGBW, W=3000K)
**O** = QW35 (RGBW, W=3500K
**R** = QW4 (RGBW, W=4000K)
**S** = QW6 (RGBW, W=6000K)
**T** = Q RGBA (Quad RGBA)

**Fixture spacing:**
**E** = End-to-end spacing for straight runs
**C** = Larger spacing for angled runs

*see page 10*

*Optics T and X: Tilt directions as viewed from the input end of the fixture - see page 9*

SCAN FOR PRODUCT PAGE

| PROJECT | FIRM | ORDER # | TYPE | QTY |
|---|---|---|---|---|
| | | | | |

## Specifications

| | |
|---|---|
| **Emitters** | 2200K, 2400K, 2700K, 3000K, 3500K, 4000K, DW (2400K-5500K),<br>Quad-color (Spectrum 4) RGBW (W=2200K, 3000K, 3500K, 4000K or 6000K), RGBL or RGBA |
| **Optics** | 10° x 10°, 25° x 25°, 40° x 40°, 30° x 10°, 60° x 10°, 60° x 60°, 100° x 100°, 10° x 35°, 10° x 60°, 30° x 60°, 60° x 30°, 90° x 10° or Asymmetric wall wash (60° x 60°, 20° tilt) - see page 9 |
| **Output** | Up to 1,870 lumens/ft (4000K, 10° x 10°) |
| **Lumen maintenance** | $L_{70}$ 150,000 hours (@ 25° C) |
| **Control** | 0-100% dimming via wired DMX (with RDM configuration). 0-10V and DALI via XTR Driver<br>*Single color models will default to 100% (on/off) output if the control input is absent (see page 14).* |
| **Maximum fixtures in series** | Up to 180' (55m) via XTR Driver 4000 /8000 (See page 14) |
| **Housing lengths** | 1' (305mm) or 4' (1220mm) |
| **Operating voltage** | 100-277VAC, 50/60Hz direct or 380VDC via XTR Driver 4000/8000 (200-300VAC input to XTR Driver) |
| **Power consumption** | **1'**: 22W **4'**: 88W |
| **Connection** | Composite IP67-rated input and output connectors. All cables are NEC compliant |
| **Mounting** | Two built-in ratcheted (tool-free) swivel mount brackets. Optional snap-in cable covers |
| **Material** | Aluminum body with tempered glass top lens |
| **Finish** | Finished aluminum, black (RAL 9005), white (RAL 9003) or custom colors (provide RAL #)<br>Optional marine coating available |
| **Ambient temperature range** | -40° F to 131° F (-40° C to 55° C) |
| **Ingress protection** | IP66, wet location |
| **Impact protection** | IK08, protection against 5 joule impact (40cm distance) |
| **Vibration protection** | ANSI C136.31, 3G-rated for high vibration and bridge applications |
| **Warranty** | 5 years, limited |
| **Weight** | **1'**: 2.86 lbs (1.3 kg) **4'**: 9.92 lbs (4.5 kg) |
| **Dimensions** | **L**x**W**x**H**: 12 or 48" x 2.3" x 3.21" (305 or 1220 x 58.5 x 81.5mm) - see page 6 |
| **Certifications** | Intertek, FC, CE, 3G LUMINAIRE VIBRATION, RoHS COMPLIANT |

## Photometrics

*For all available IES files, please visit acclaimlighting.com/products/linear-xtr-h2*

| Color or color temperature | Lumens (/ft) | Max Candela | Efficacy (lm/W) | CRI (Ra) | TM30 |
|---|---|---|---|---|---|
| **3000K** (1ft, 10° x 60°) | 1,430 | 4,018 | 65 | 84.2 | 85.1 |
| **4000K** (1ft, 10° x 60°) | 1,606 | 4,528 | 73 | 81.6 | 83.7 |
| **RGBW** (1ft, 10° x 60°) | 704 | 2,264 | 32 | 80.5 | 83.2 |
| **DW** (1ft, 10° x 60°) | 990 | 4,056 | 45 | 75 | 77 |

# Related components

## Mounting accessories

### Extender bars

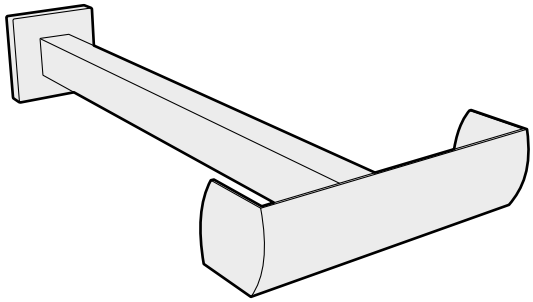

| | *for 1' fixture* | *for 4' fixture* |
|---|---|---|
| 6" | **XT2HEB1-05** | **XT2HEB4-05** |
| 1' | **XT2HEB1-1** | **XT2HEB4-1** |
| 2' | **XT2HEB1-2** | **XT2HEB4-2** |
| 3' | **XT2HEB1-3** | **XT2HEB4-3** |

### Snap-in cable covers

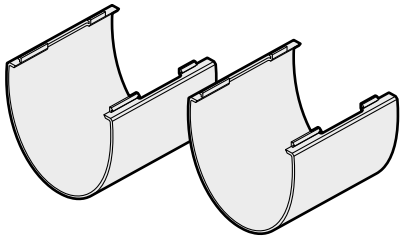

2 pcs **XT2HCCS**

## Beam accessories

### Single-sided glare shields

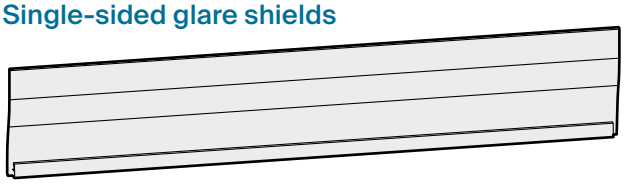

| | |
|---|---|
| 1' | **XT2HGS1** |
| 4' | **XT2HGS4** |

### Half louvers

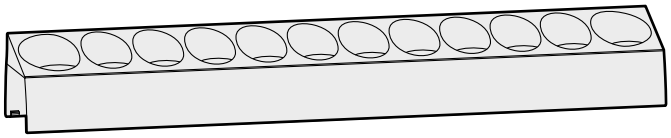

| | |
|---|---|
| 1' | **XT2HHL1** |
| 4' | **XT2HHL4** |

### Full louvers

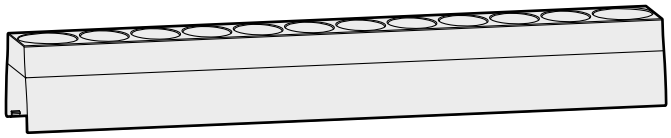

| | |
|---|---|
| 1' | **XT2HFL1** |
| 4' | **XT2HFL4** |

SCAN FOR PRODUCT PAGE

| PROJECT | FIRM | ORDER # | TYPE | QTY |
|---|---|---|---|---|
| | | | | |

# Related components

## XTR Drivers (optional for extended run lengths)

- Power input: 200 to 300VAC
- Control input: DMX/RDM, 0-10V sink or DALI

### XTR Driver 4000

- Up to 4000W power consumption
- Maximum of 1x 180' Linear XTR H2 run*

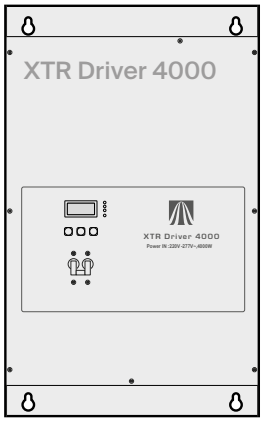


Part # **XTR Driver 4000**

### XTR Driver 8000

- Up to 8000W power consumption
- Maximum of 2x 180' Linear XTR H2 runs*

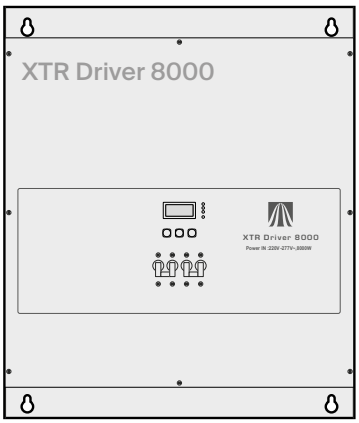


Part # **XTR Driver 8000**

***** *All fixtures controlled within a single DMX universe*

### Test and configuration tool kit

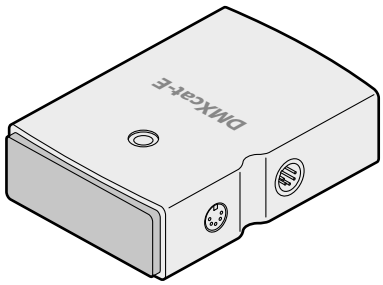

DMX/RDM, ArtNet, sACN, SMPTE LTC and Midi test/configuration tool

**DMXcat-E**

SCAN FOR PRODUCT PAGE

PROJECT | FIRM | ORDER # | TYPE | QTY

# Related components

## Feed cables (inc terminator)

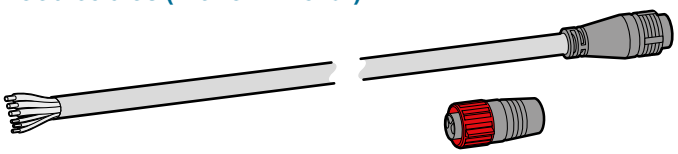

| | |
|---|---|
| 10' (3m) | **XT2FC10** |
| 50' (15m) | **XT2FC50** |
| 100' (30m) | **XT2FC100** |

## Terminator (end cap)

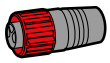

Terminator **XT2ECT**

## Link cables

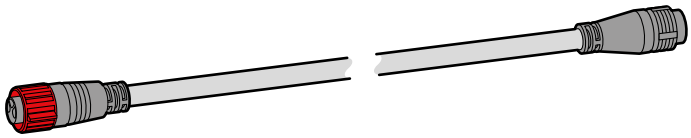

| | |
|---|---|
| 6" (15cm) | **XT2LC0.5** |
| 1' (30cm) | **XT2LC1** |
| 5' (1.5m) | **XT2LC5** |
| 10' (3m) | **XT2LC10** |
| 50' (15m) | **XT2LC50** |
| 100' (30m) | **XT2LC100** |

## Signal protocol converters *(see page 12)*

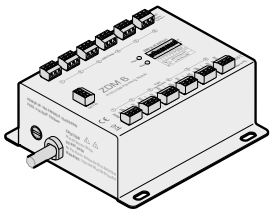

0-10V multiple channel converter **ZDM 6**

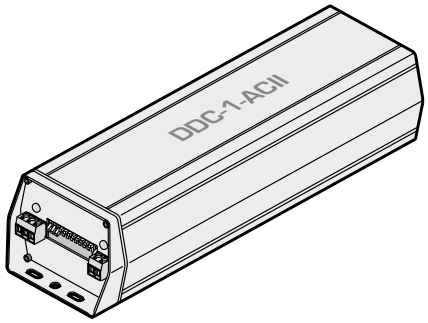


DALI 2, DT6 and DT8 64-channel converter **DDC 1 AC**

## AJBOX (IP66) junction box plus outlet cable gland

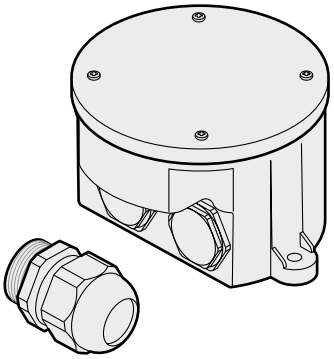

Part # **AJBOX1**
IP66 NEC compliant high and low voltage junction box
*½" conduit inputs for AC + DMX, ¾" conduit for XT2FC#*
*Built-in AC surge protection up to 10kV & 10kA*
*Suitable for 120-277VAC runs. Not certified for use with XTR Drivers*

## AJBOX1 Extended (IP66) junction box

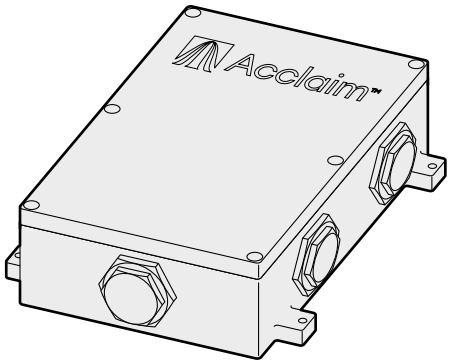


Part # **AJBOX1E#** *(# = color)*
*IP66 NEC-compliant high and low voltage junction box with six sealed NPT ¾" access ports for conduit fixtures or cable glands (by others) for power and control plus XT2FC# feed cable. Built-in AC surge protection up to 10kV and 10kA. Suitable for 120-277VAC runs. Not certified for use with XTR Drivers*

PROJECT | FIRM | ORDER # | TYPE | QTY

## Dimensions

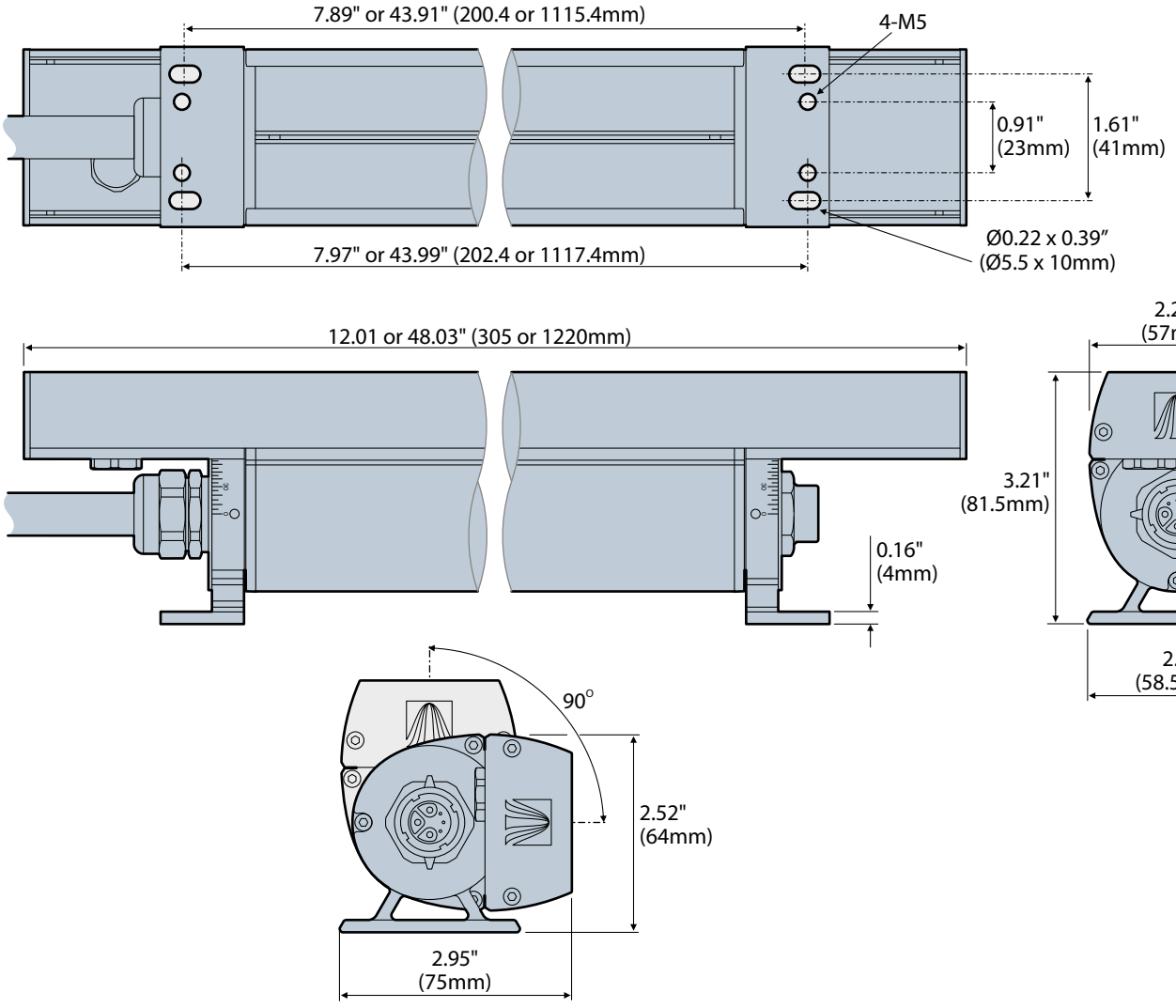


### with optional glare shield

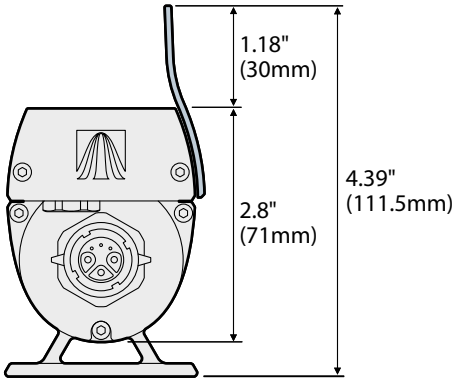


### with optional louver

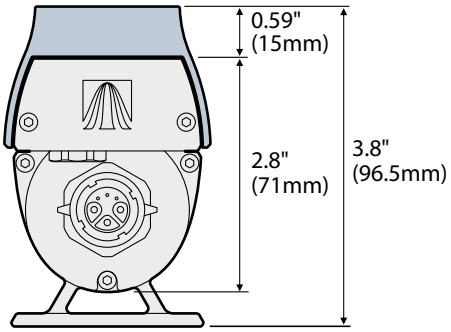


SCAN FOR PRODUCT PAGE

| PROJECT | FIRM | ORDER # | TYPE | QTY |
|---|---|---|---|---|
| | | | | |

# Dimensions

## Cables

### Feed cable

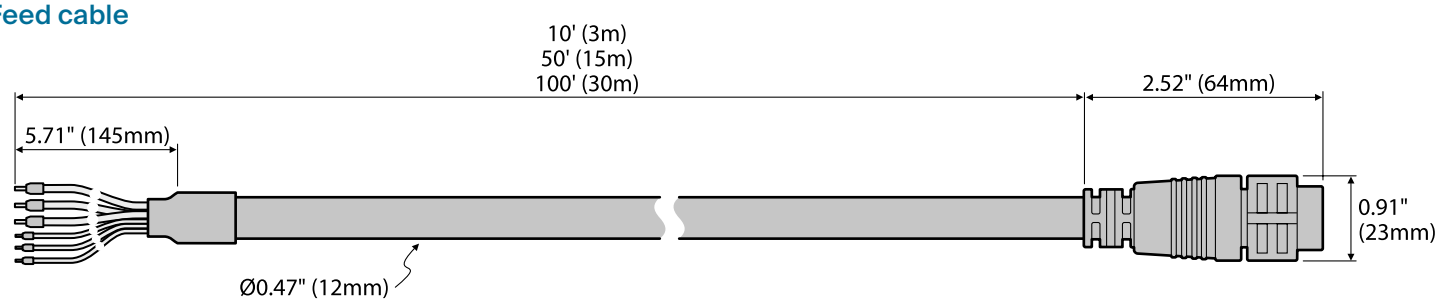


### Link cable

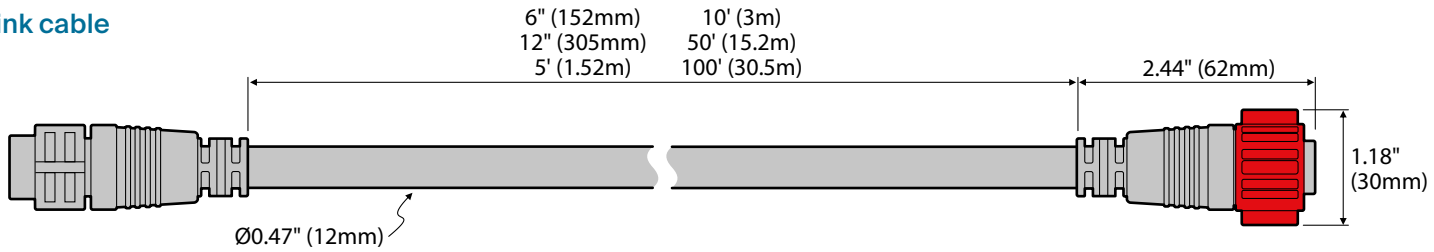


### Terminator (end cap)

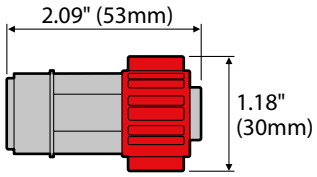


SCAN FOR PRODUCT PAGE

| PROJECT | FIRM | ORDER # | TYPE | QTY |
|---|---|---|---|---|
| | | | | |

## Dimensions

### AJBOX1

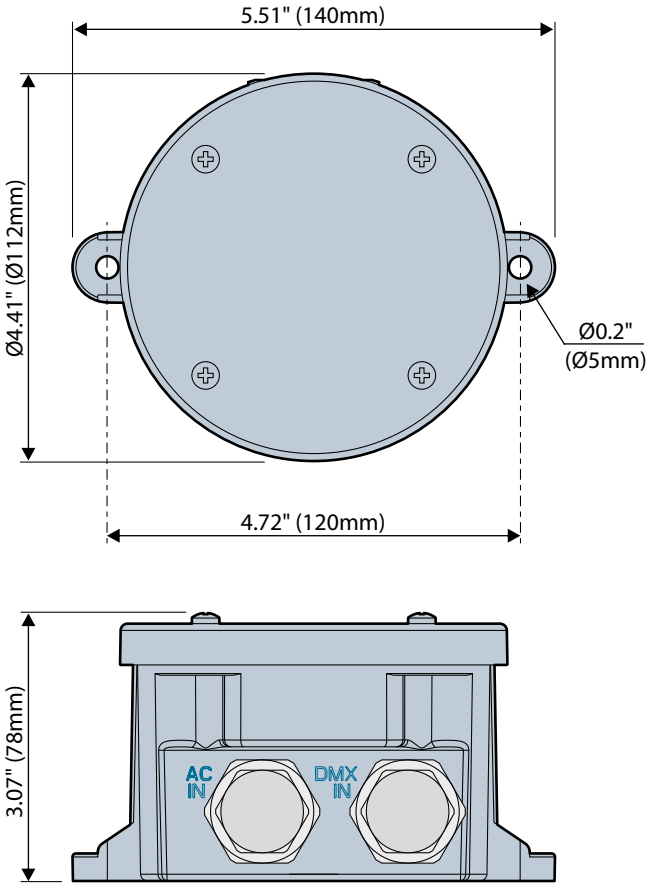


### AJBOX1 Extended

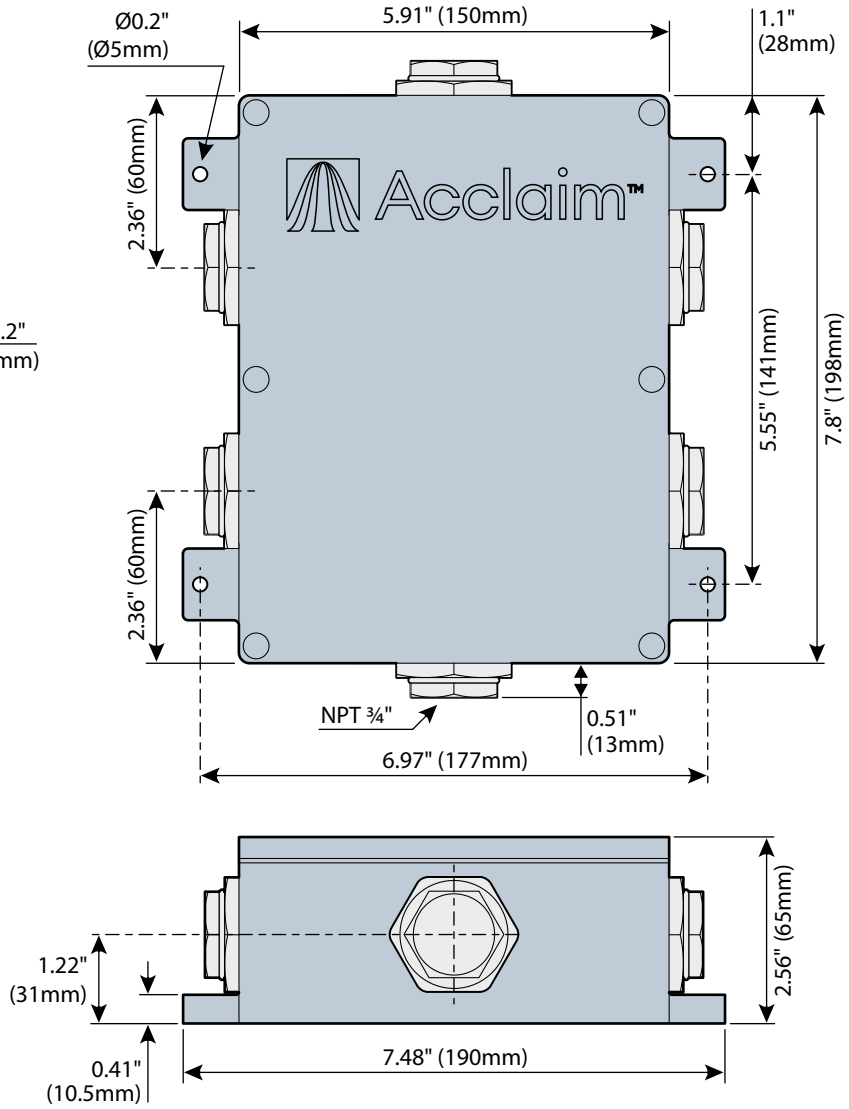


SCAN FOR PRODUCT PAGE

PROJECT | FIRM | ORDER # | TYPE | QTY

## Asymmetric wall wash lens options

Two special lens options are available, both of which provide a 20 degree side-bias to the direction of the emitted output. Both lens options produce a 60 x 60 degree main beam angle; the difference is whether those beams are biased to the left or to the right of the fixture, in relation to the feed in connection.

### Asymmetric Wall Wash Right (60° x 60° with 20° tilt)

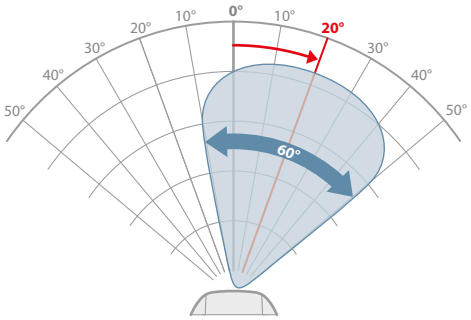


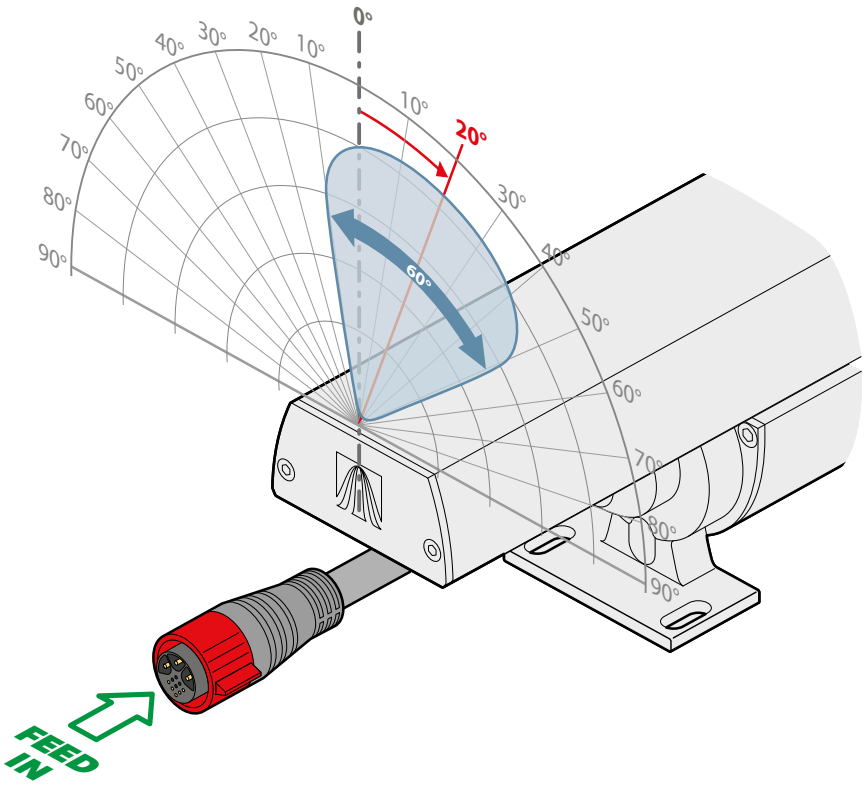


### Asymmetric Wall Wash Left (60° x 60° with 20° tilt)

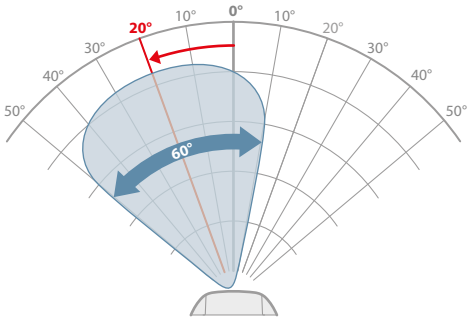


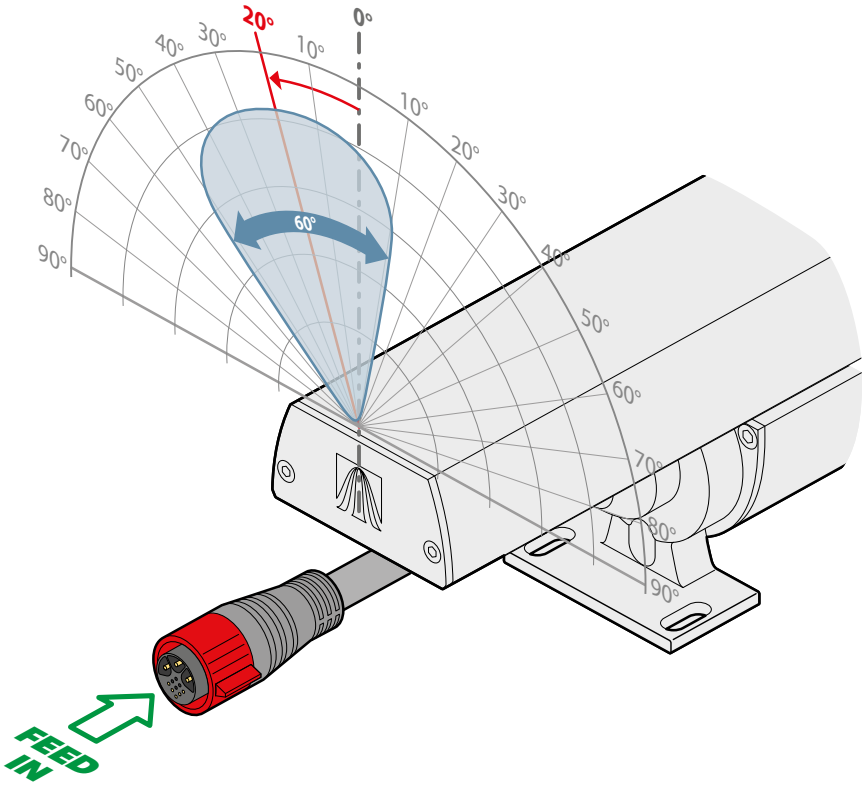

PROJECT | FIRM | ORDER # | TYPE | QTY

## Fixture spacing

Linear XTR H2 fixtures are available with two different spacing arrangements; the one to choose depends on how your fixture runs will be laid out: straight or angled.

### End-to-end spacing for straight runs (option E)

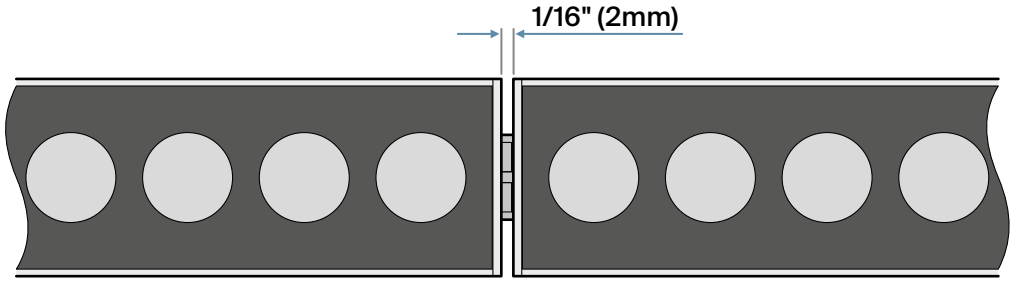


### Larger spacing for angled runs (option C)

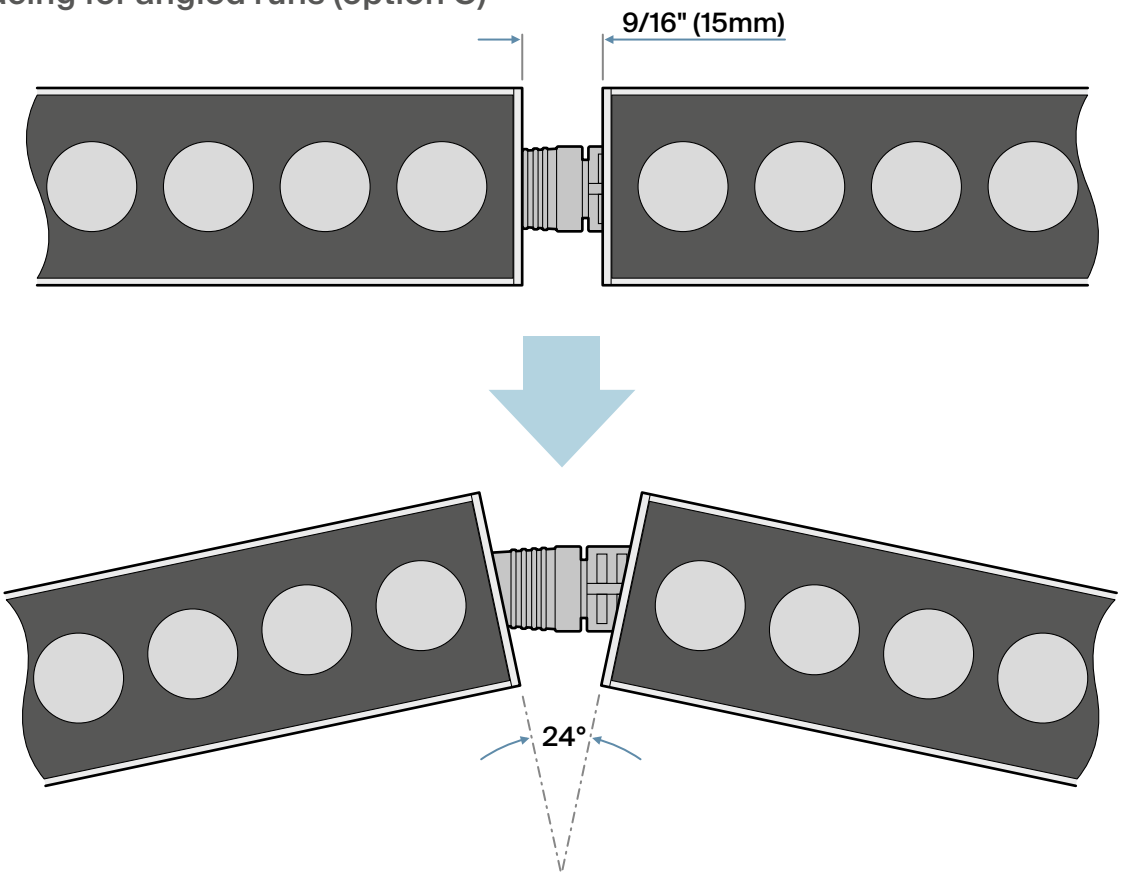


SCAN FOR PRODUCT PAGE

PROJECT | FIRM | ORDER # | TYPE | QTY

# *CCT Select* color mixing

Linear XTR H2 fixtures fitted with RGBL (QL) emitters allow you to mix saturated and pastel colors in addition to calling up any color temperature of white (using a dedicated DMX control channel). The special mode uses six channels to provide full control over the RGBL emitters.

## Mixing saturated and pastel colors individually

Use DMX channels 1 to 4 to mix the required shade.

Use channel 6 to determine the overall output intensity.

*Note: **Channel 5** must be at **zero**.*

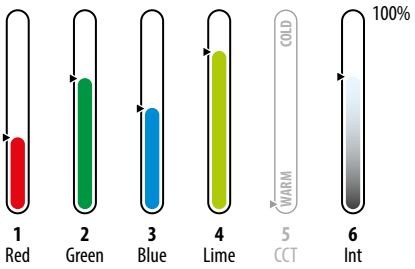


## Choosing a temperature of white

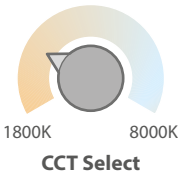


Use DMX channel 5 to select the required correlated color temperature (CCT) ranging from 1800K (at 1%) to 8000K (at 100%).

Use channel 6 to control the overall output intensity.

*Note: When channel 5 receives any value other than zero, the input values of channels 1 to 4 will be ignored.*

*Note: A full list of DMX values for each color temperature are provided in the Linear XTR H2 user guide.*

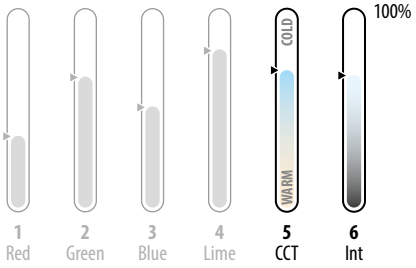


| DMX value | Color temp |
|---|---|
| 0 | Off |
| 001-004 | 1800K |
| 005-008 | 1900K |
| 009-012 | 2000K |
| 013-016 | 2100K |
| 017-020 | 2200K |
| - | - |
| - | - |
| 233-236 | 7600K |
| 237-240 | 7700K |
| 241-245 | 7800K |
| 246-250 | 7900K |
| 251-255 | 8000K |

# Single channel tungsten emulation

## (Ai Dim to Warm)

In addition to the multi-channel control modes mentioned above, Linear XTR H2 fixtures fitted with RGBL (QL) emitters also offer a simple one channel option. As the single channel is raised from zero to 100% and back to zero, the fixture responds with combined graduations of both intensity and color temperature to skilfully emulate the dimming response of a typical high-output tungsten source.

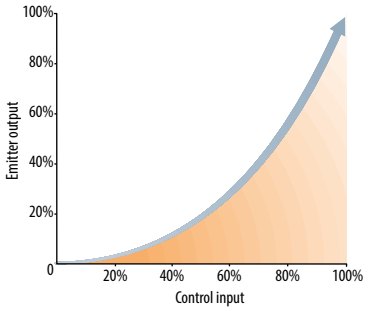


Ai Dim technology

| PROJECT | FIRM | ORDER # | TYPE | QTY |
|---|---|---|---|---|
| | | | | |

# Using other control inputs

Linear XTR H2 fixtures use DMX as their native control method, however, it is possible to use other common control protocols when required, such as 0-10V (source or sink) or DALI.

## Control inputs via converters

- DMX - connect a DMX input directly to the feed cable.
- 0-10V - use an Acclaim Lighting ZDM 6 to convert one or more analog control feeds into a combined DMX feed.
- DALI - use an Acclaim Lighting DDC-1-AC to convert one or more DALI channels into a combined DMX feed.

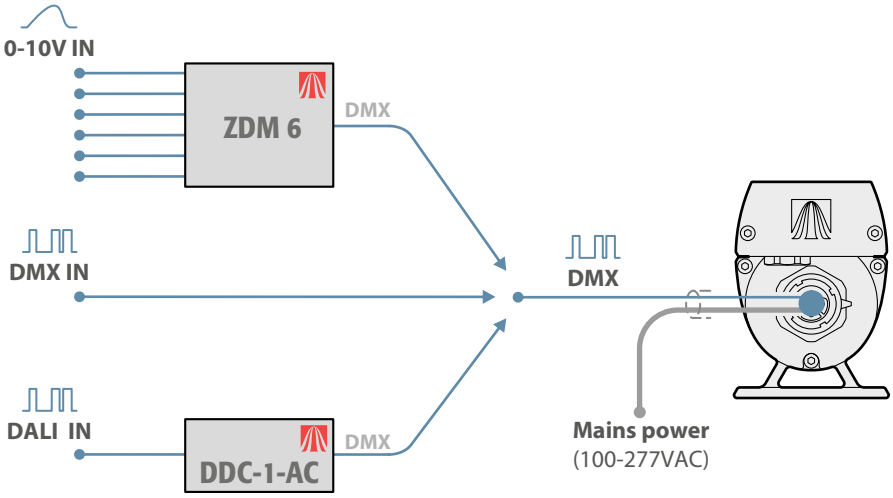


When using Acclaim Lighting ZDM 6 or DDC-1-AC modules it is possible to convert multiple inputs into separate DMX channels within a consolidated feed - thus allowing multiple Linear XTR H2 fixtures to be uniquely addressed. The ZDM 6 can convert up to six 0-10V inputs into DMX channels, whereas the DDC-1-AC can convert a maximum of 64 DALI channels (although large numbers of channels are not recommended due to the timing limitations of the DALI standard).

## Control inputs via an XTR Driver

The XTR Driver 4000 and 8000 units can accept DMX, 0-10V or DALI control inputs directly. The latter two methods are converted within the driver before being transmitted as DMX within the consolidated output, together with the high voltage XTR power.

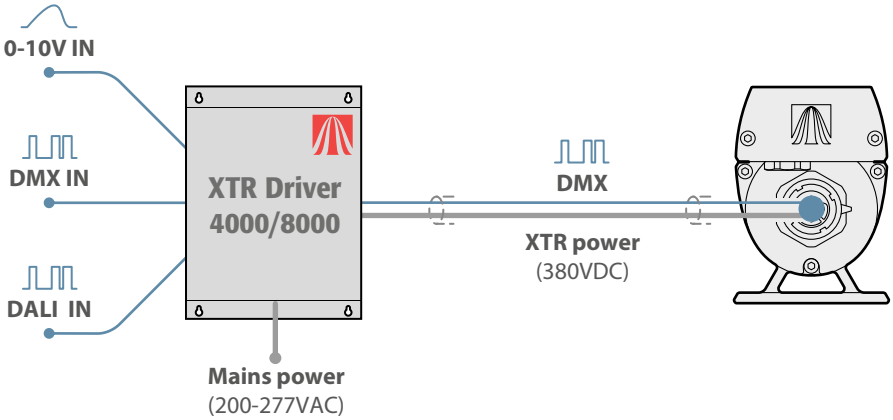


When using an XTR Driver, the internal conversion supports either a single 0-10V feed or a single 'broadcast' DALI channel - meaning that all Linear XTR H2 fixtures will use the same single control address. To benefit from multiple channels, use a ZDM 6 or DDC-1-AC to externally convert signals (see above).

SCAN FOR PRODUCT PAGE

PROJECT | FIRM | ORDER # | TYPE | QTY

# Unique addressing under DMX control

## 1’ (305mm) Linear XTR H2

| Emitter options | DMX channels used | Total channels per fixture | Maximum unique fixtures |
|---|---|---|---|
| | Cell 1 | | |
| W | 1 | **1** | **512** |
| DW | 2 | **2** | **256** |
| RGBW/A | 4 | **4** | **128** |

## 4’ (1220mm) Linear XTR H2 (operating in ‘1 Group’ mode)

| Emitter options | DMX channels used | Total channels per fixture | Maximum unique fixtures |
|---|---|---|---|
| | All cells combined | | |
| W | 1 | **1** | **512** |
| DW | 2 | **2** | **256** |
| RGBW/A | 4 | **4** | **128** |

## 4’ (1220mm) Linear XTR H2 (operating in ‘4 Group’ mode)

| Emitter options | DMX channels used | | | | Total channels per fixture | Maximum unique fixtures |
|---|---|---|---|---|---|---|
| | Cell 1 | Cell 2 | Cell 3 | Cell 4 | | |
| W | 1 | 1 | 1 | 1 | **4** | **128** |
| DW | 2 | 2 | 2 | 2 | **8** | **64** |
| RGBW/A | 4 | 4 | 4 | 4 | **16** | **32** |

The maximum number of fixtures that can be uniquely addressed in a run is determined by the length, emitter type and operation mode of each linear fixture, as summarized in the tables shown here.

Additionally, any number of fixtures in a run can be configured to use duplicate control addresses, as required.

# Important cabling considerations

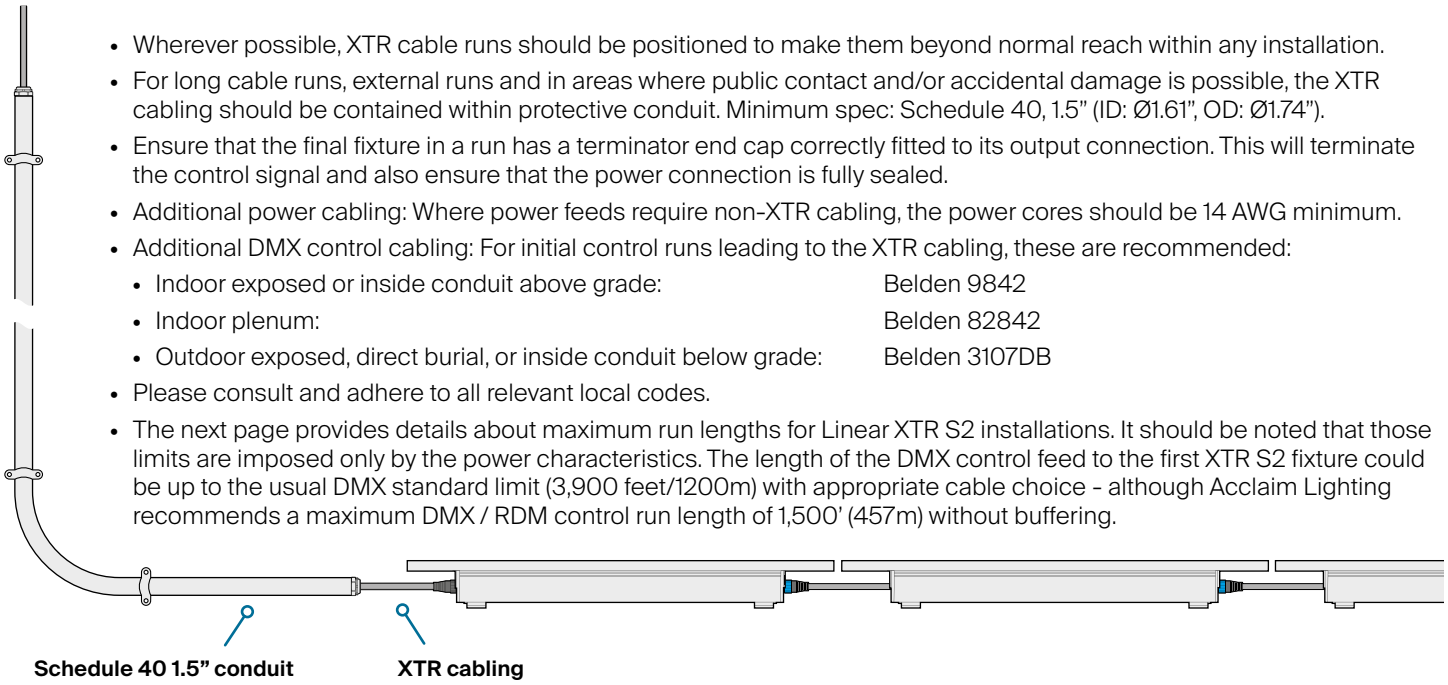


- Wherever possible, XTR cable runs should be positioned to make them beyond normal reach within any installation.
- For long cable runs, external runs and in areas where public contact and/or accidental damage is possible, the XTR cabling should be contained within protective conduit. Minimum spec: Schedule 40, 1.5” (ID: Ø1.61”, OD: Ø1.74”).
- Ensure that the final fixture in a run has a terminator end cap correctly fitted to its output connection. This will terminate the control signal and also ensure that the power connection is fully sealed.
- Additional power cabling: Where power feeds require non-XTR cabling, the power cores should be 14 AWG minimum.
- Additional DMX control cabling: For initial control runs leading to the XTR cabling, these are recommended:
  - Indoor exposed or inside conduit above grade: Belden 9842
  - Indoor plenum: Belden 82842
  - Outdoor exposed, direct burial, or inside conduit below grade: Belden 3107DB
- Please consult and adhere to all relevant local codes.
- The next page provides details about maximum run lengths for Linear XTR S2 installations. It should be noted that those limits are imposed only by the power characteristics. The length of the DMX control feed to the first XTR S2 fixture could be up to the usual DMX standard limit (3,900 feet/1200m) with appropriate cable choice - although Acclaim Lighting recommends a maximum DMX / RDM control run length of 1,500’ (457m) without buffering.

PROJECT | FIRM | ORDER # | TYPE | QTY

# Run lengths

Linear XTR H2 fixtures can be fed directly from a suitably protected mains supply (100 to 277VAC 50/60Hz) to provide standard run lengths up to 400' (122m). Alternatively, an Acclaim Lighting XTR Driver can create an increased supply voltage to allow continuous runs up to 700' (213m). *Note: Linear XTR H2 fixtures can use either power method without any reconfiguration; voltage levels are automatically detected.*

## Standard run lengths: Mains input plus AJBOX1 and feed cable

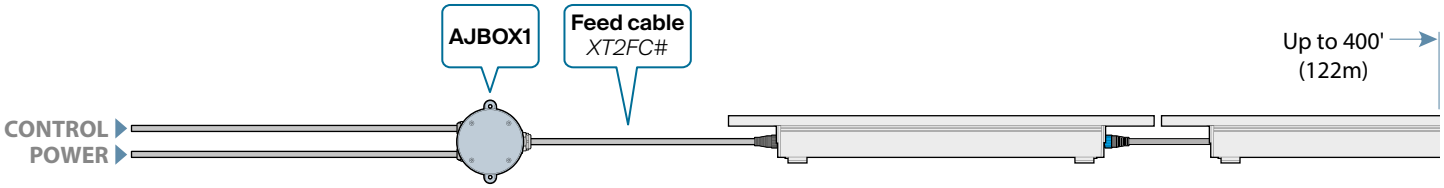


## Extended run lengths: XTR Driver plus link cable

XTRLink technology

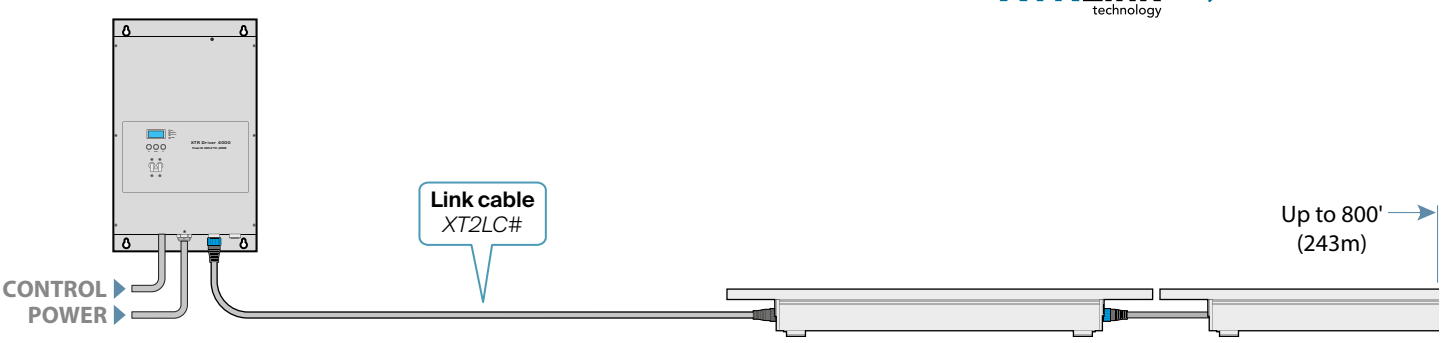


## Maximum length of fixtures in a single run

*(all fixtures controlled within a single DMX universe)*

| Power draw | 100/120VAC supply | 230/277VAC supply | XTR Driver 4000 | XTR Driver 8000 |
|---|---|---|---|---|
| 22W per foot | 50' (15m) | 100' (30m) | 180' (55m) | 2x 180' (55m) |

## Maximum overall length of a single run (fixtures + all cabling)

*(all fixtures controlled within a single DMX universe)*

| 100/120VAC supply | 230/277VAC supply | XTR Driver 4000 | XTR Driver 8000 |
|---|---|---|---|
| 200' (61m) | 400' (122m) | 800' (243m) | 2x 800' (243m) |

## Behaviors if the control signal is lost or not applied

If the DMX control signal is not present while power is applied, the fixtures will respond in the following ways:

- Single color versions - when DMX is lost (or not used), each fixture will go to full output until the control signal is restored. If power is cycled while the control signal is absent, each fixture will remain at full until the signal is restored. If 100% output is required at all times during normal operation, this feature allows the fixtures to be fed with power only, without need for a control input.
- Dynamic white, RGBW, RGBL and RGBA versions - when DMX is lost, each fixture will hold the last received values until the control signal is restored. If power is cycled while the control signal is absent, each fixture will retain the last received values until the signal is restored.

For full installation details, please refer to the **user guide**, available for free download here: