Dyna Accent Mini™

Acclaim™

PROJECT	FIRM	ORDER #	TYPE	QTY



Don't let the small size of the **Dyna Accent Mini™** fixtures fool you; they punch above their weight and are not short of the quality features and construction you expect from Acclaim Lighting. Available with four white-only emitter options or three different choices of RGBW emitters, the output can be tailored to suit each location using optional spread lenses or snoots. Mounting options include a surface mount base, an attachment for 4" electrical boxes and even a landscape ground spike.

Supply needs are greatly simplified by the combined power and DMX control cable. Additionally, if you specify the Outdoor Link System option, each Dyna Accent Mini can be connected into an OLS-equipped installation within seconds (see page 10).

As well as wired DMX control, every Dyna Accent Mini fixture also benefits from built-in Aria X2 wireless DMX capabilities to simplify installation even further. Configuration is achieved using RDM (via wired DMX) and all standard mains voltages are supported.

At a glance

Optics

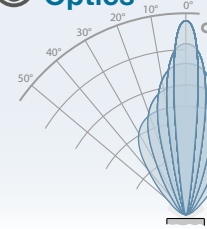

7° x 7° white native
12° x 12° RGBW native
20° x 20°
40° x 40°
60° x 60°
10° x 60°

Wireless linking



Emitters

White (2700K, 3000K, 3500K or 4000K) *or* **RGBW** (W=3000K, 4000K or 6000K)

Power

100 to 277VAC
50/60Hz

Temperature

-40° F to 122° F
-40° C to 50° C

Protection

Ingress: IP66
Impact: IK07
Vibration: 3G

Control

DMX (+RDM)

Core technologies

SpectrumFour technology
OutdoorLink system
aria X MULTI-BAND WIRELESS CONTROL

Configure your product

DMA-2 1- P-X2

Example final code: ***DMA-241-LACP-X2***

Finish:
1 = Black[1]
2 = White[1]
4 = Gray
7 = Custom[1]

Cable system:
A = 5' (1.5m) standard bare wires
L = 5' (1.5m) Outdoor Link System[2]

Optics:
A = 7° (white emitters)
C = 12° (RGBW emitters)

Emitters:
A = 2700K[1]
C = 3000K[1]
D = 3500K[1]
E = 4000K[1]
H = QW6 (RGBW, W=6000K)
I = QW4 (RGBW, W=4000K)
L = QS (RGBW, W=3000K)

[1] *Special order item*
[2] *Requires extra components - see page 10*

SCAN FOR PRODUCT PAGE

PROJECT	FIRM	ORDER #	TYPE	QTY

Specifications

Emitters	2700K, 3000K, 3500K, 4000K, QS (W=3000K), QW4 (W=4000K) or QW6 (W=6000K)
Optics	7° native (white) or 12° native (color). Spread lens options: 20°, 40°, 60°, 10° x 60°
Output	Up to 760 lumens (58 lm/W), 30,865 center candela - *see below*
Lumen maintenance	L_{70} 150,000 hours (@ 25° C)
Control	0-100% dimming via wired DMX (with RDM configuration) or DMX via built-in Aria X2 wireless
Maximum fixtures in series	32 via wired DMX (with power connections local to each fixture)
Operating voltage	100-277VAC, 50/60Hz
Power consumption	13W
Connection	Attached 5' (1.5m) hybrid IP66 cable (AWM 21388). Combined AC power and DMX/RDM Optional Outdoor Link System enables rapid power and control attachment - *see page 10*
Mounting	Directly compatible with ½" NPT pipe (O.D.=0.855"). Mount options also include: Ground spike, direct surface mount base, 4" round electrical box plate and extender arms
Effective projected area	0.56 ft^2
Material	Die cast aluminum, glass top lens, optional marine coating available
Finish	Gray standard (RAL 7047), black (RAL 9005), white (RAL 9003) and custom colors optional
Ambient temperature range	-40° F to 122° F (-40° C to 50° C)
Ingress protection	IP66, wet location
Impact protection	IK07, protection against 2 joule impact (40cm distance)
Vibration protection	ANSI C136.31, 3G-rated for high vibration and bridge applications
Warranty	5 years, limited
Weight	2.87 lbs (1.3kg)
Dimensions	*See page 7*
Certifications	Intertek, CE, 3G LUMINAIRE VIBRATION

Photometrics

For all available IES files, please visit acclaimlighting.com/dyna-accent-mini

Emitters and optics	Lumens	Max Candela	Efficacy (lm/W)	CRI (Ra)	TM30
2700K (7°)	642	21,910	49.3	80	81.9
3000K (7°)	757	23,911	58.2	80.4	80.7
3500K (7°)	735	26,645	56.5	80	80.2
4000K (7°)	760	30,865	58.4	80.4	80.8
QS (12°)	303	5,514	23.3	-	-

PROJECT | FIRM | ORDER # | TYPE | QTY

Related components

Beam shaping accessories

Full snoots

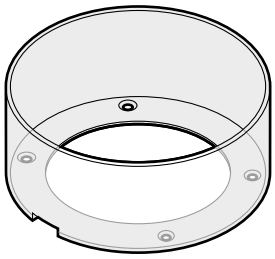

Gray	**DMAFS**
Black	**DMAFS-B**
White	**DMAFS-W**
Custom*	**DMAFS-C**

** RAL # also required*

Spread lenses

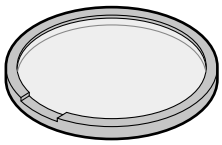

20°	**DMASL20**
40°	**DMASL40**
60°	**DMASL60**
10° x 60°	**DMASL1060**

Mounting accessories

Base plates (plus hollow lock nut)

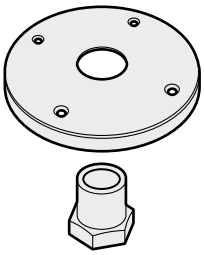

For use with 4" round electrical box	Gray	**DMAEBM**
	Black	**DMAEBM-B**
	White	**DMAEBM-W**
	Custom*	**DMAEBM-C**
For direct surface mounting	Gray	**DMADSM**
	Black	**DMADSM-B**
	White	**DMADSM-W**
	Custom*	**DMADSM-C**

Ground spike (plus threaded joiner)

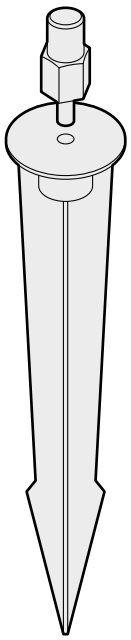

Gray	**DMASTM**
Black	**DMASTM-B**
White	**DMASTM-W**
Custom*	**DMASTM-C**

SCAN FOR PRODUCT PAGE

Related components

Mounting accessories (continued)

Extender arms

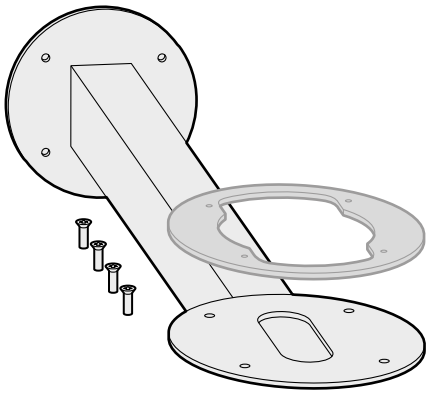

6" (15cm)	Gray	**DYNAHEB6**
	Black	**DYNAHEB6-B**
	White	**DYNAHEB6-W**
	Custom*	**DYNAHEB6-C**
12" (30cm)	Gray	**DYNAHEB12**
	Black	**DYNAHEB12-B**
	White	**DYNAHEB12-W**
	Custom*	**DYNAHEB12-C**
18" (45cm)	Gray	**DYNAHEB18**
	Black	**DYNAHEB18-B**
	White	**DYNAHEB18-W**
	Custom*	**DYNAHEB18-C**
36" (91cm)	Gray	**DYNAHEB36**
	Black	**DYNAHEB36-B**
	White	**DYNAHEB36-W**
	Custom*	**DYNAHEB36-C**

Junction boxes

AJBOX1 (IP66) junction box (plus outlet cable gland)

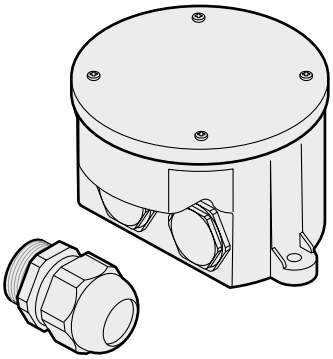

Part # **AJBOX1**

IP66 NEC-compliant high and low voltage junction box with two sealed ½" input ports for AC & DMX plus NPT ¾" output port for OLSF# feed cable. Built-in AC surge protection up to 10kV and 10kA

AJBOX1 Extended (IP66) junction box

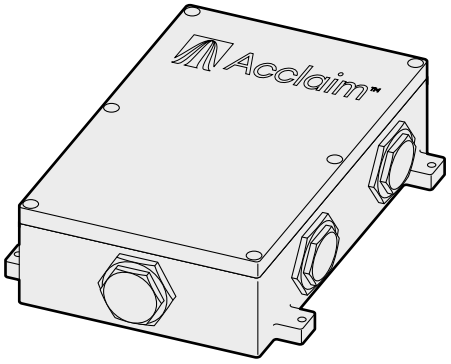

Part # **AJBOX1E#** *(# = color)*

IP66 NEC-compliant high and low voltage junction box with six sealed NPT ¾" access ports for conduit fixtures or cable glands (by others) for power and control plus OLSF# feed cable. Built-in AC surge protection up to 10kV and 10kA

SCAN FOR PRODUCT PAGE

Related components

Outdoor Linking System - See also page 10

Feed cables

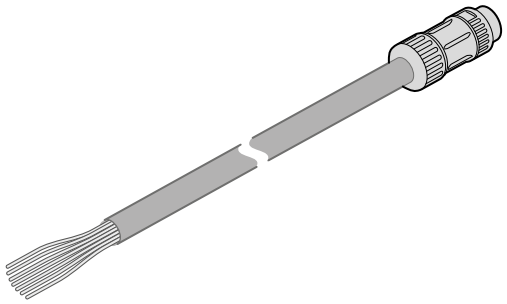

1' (30cm)	**OLSF1#-V2**
5' (1.5m)	**OLSF5#-V2**
10' (3m)	**OLSF10#-V2**
25' (7.6m)	**OLSF25#-V2**
50' (15.2m)	**OLSF50#-V2**

 # = color: G-Gray, B-Black, W-White, C-Custom (RAL# required)

Link cables

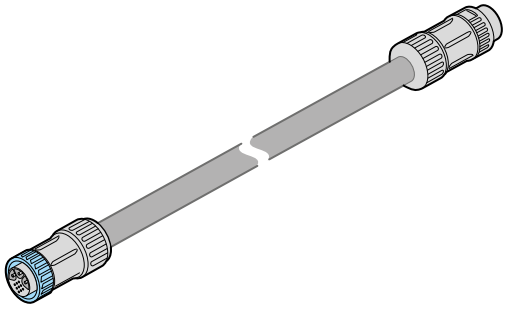

1' (30cm)	**OLSL1#-V2**
5' (1.5m)	**OLSL5#-V2**
10' (3m)	**OLSL10#-V2**
25' (7.6m)	**OLSL25#-V2**
50' (15.2m)	**OLSL50#-V2**

 # = color: G-Gray, B-Black, W-White, C-Custom (RAL# required)

End cap with DMX termination

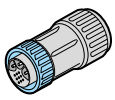

Part#	**OLSEC-B**	Black
	OLSEC-W	White

T-junction

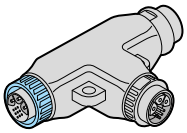

Part#	**OLST2-B**	Black
	OLST2-W	White

Y-junction

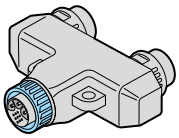

Part#	**OLSY2-B**	Black
	OLSY2-W	White

SCAN FOR PRODUCT PAGE

PROJECT | FIRM | ORDER # | TYPE | QTY

Related components

Signal converters (see page 12)

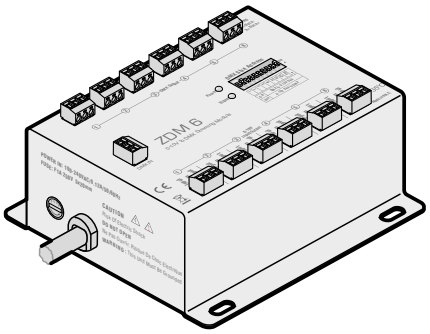

Multi-channel (0-10V) converter **ZDM6**

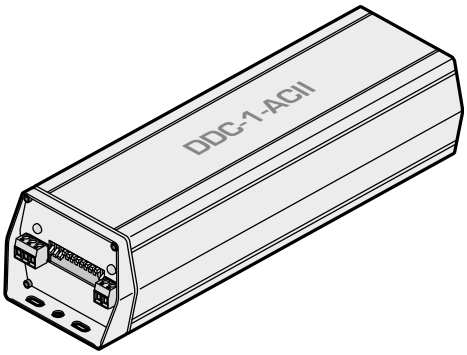

DALI multiple channel converter **DDC 1 AC**

Test and configuration tool kit

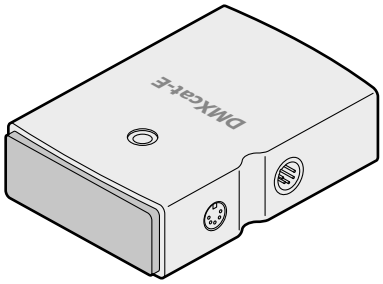

DMXcat-E
DMX/RDM, ArtNet, sACN, SMPTE LTC and Midi test/configuration tool

Wireless DMX transceiver

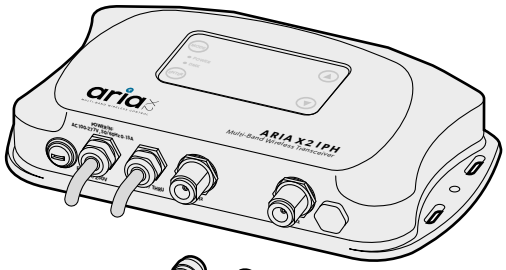

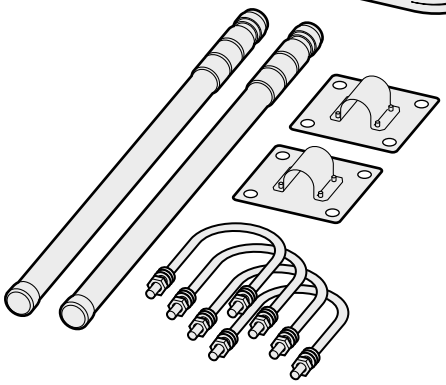

Aria X2 IPH multi-band wireless transceiver with two antennas, two antenna wall brackets and four U-bolts **AX2IPHT**

SCAN FOR PRODUCT PAGE

PROJECT | FIRM | ORDER # | TYPE | QTY

Dimensions

Dyna Accent Mini

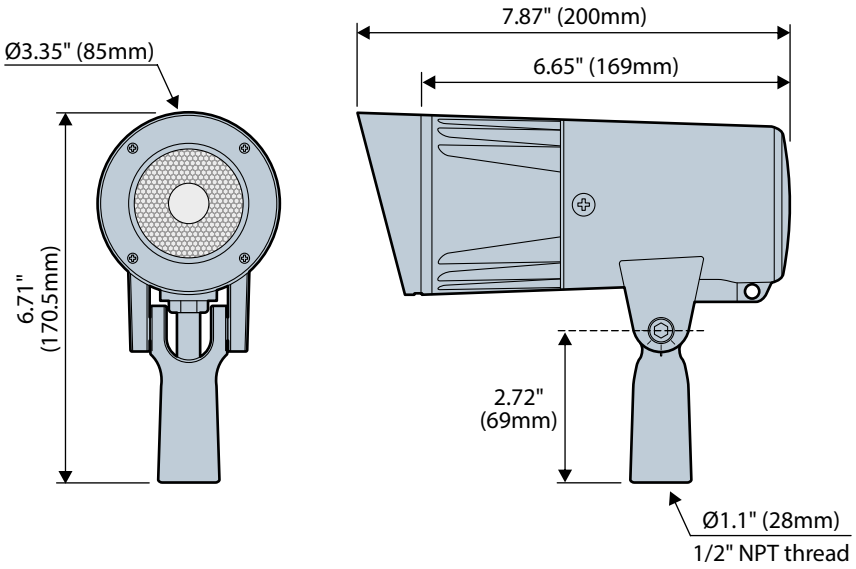

Base plate (for 4” electrical box)

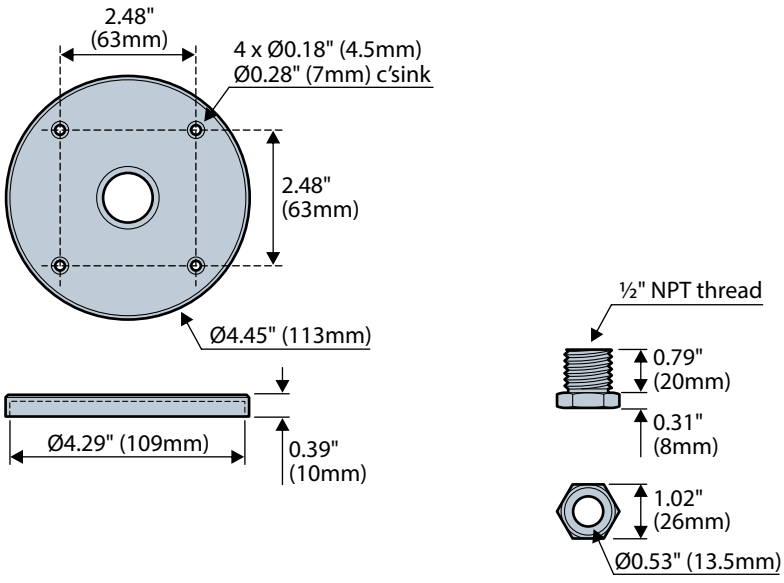

Base plate (for surface mounting)

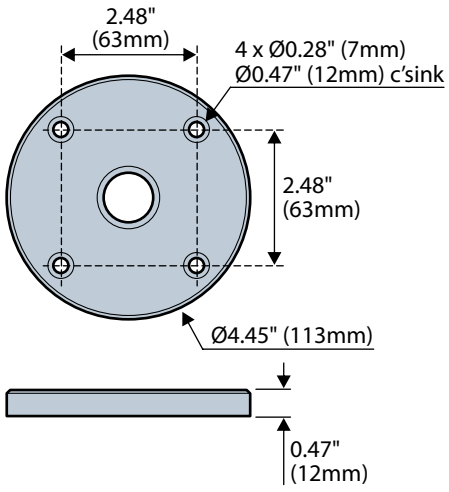

Hollow lock nut for base plates

SCAN FOR PRODUCT PAGE

PROJECT | FIRM | ORDER # | TYPE | QTY

Dimensions

Ground spike and joiner

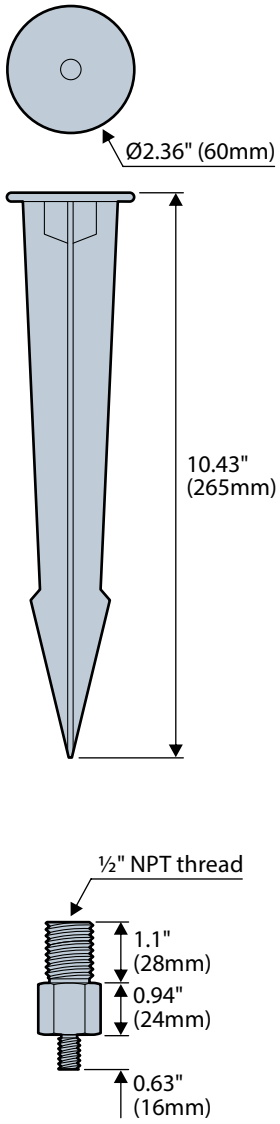

AJBOX1

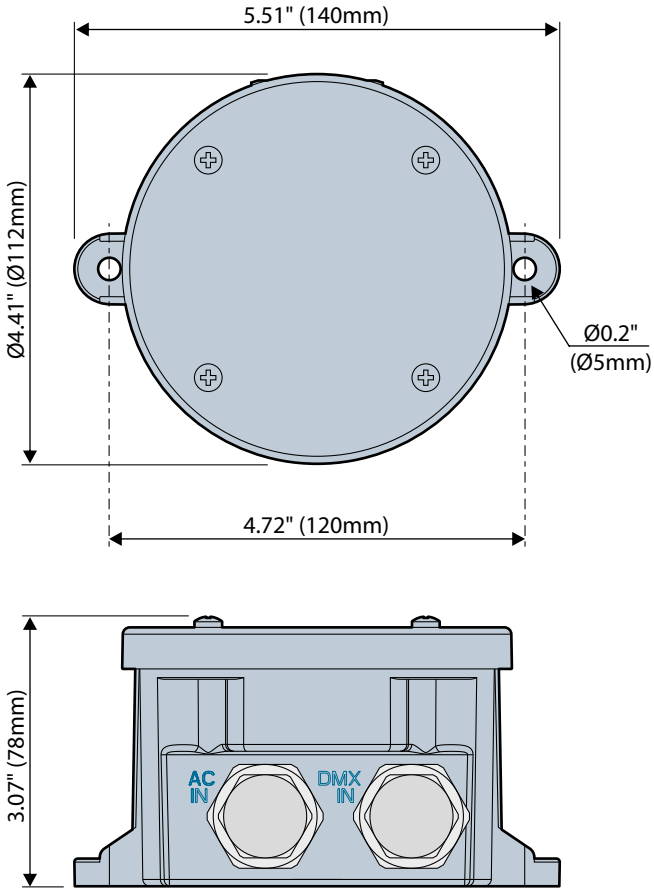

SCAN FOR PRODUCT PAGE

PROJECT | FIRM | ORDER # | TYPE | QTY

Dimensions

Feed cable

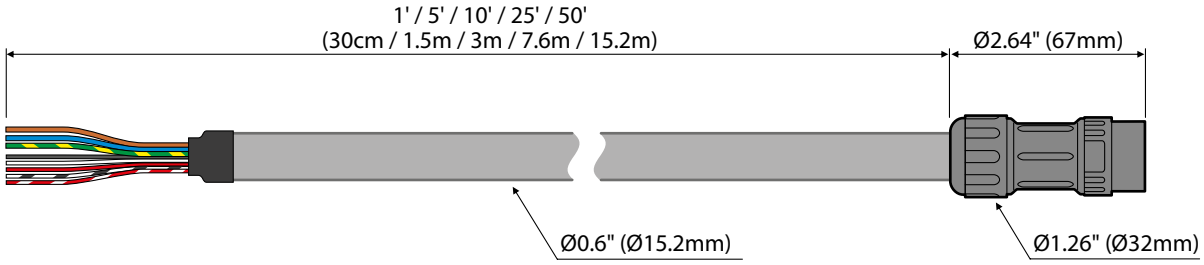

Link cable

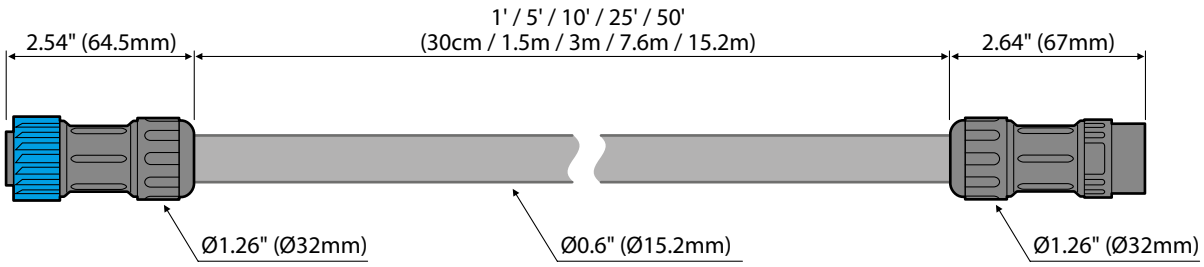

T-junction

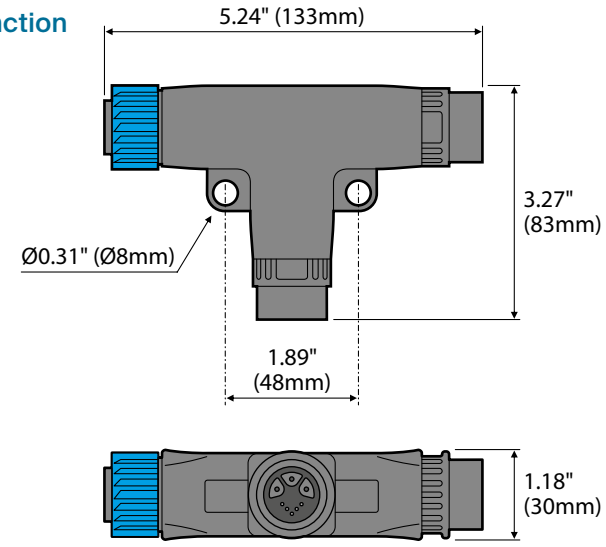

Y-junction

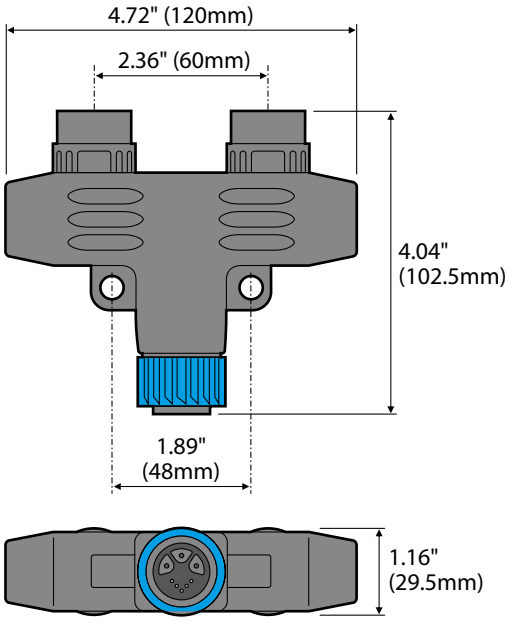

End cap with DMX termination

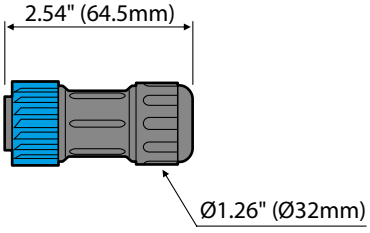

SCAN FOR PRODUCT PAGE

PROJECT | FIRM | ORDER # | TYPE | QTY

Acclaim Lighting Outdoor Link System (OLS)

OutdoorLink system

The Outdoor Link System (OLS) from Acclaim Lighting greatly simplifies the task of distributing power and control to multiple fixtures. OLS-equipped fixtures can be added to, and removed from an installation in a fraction of the usual time.

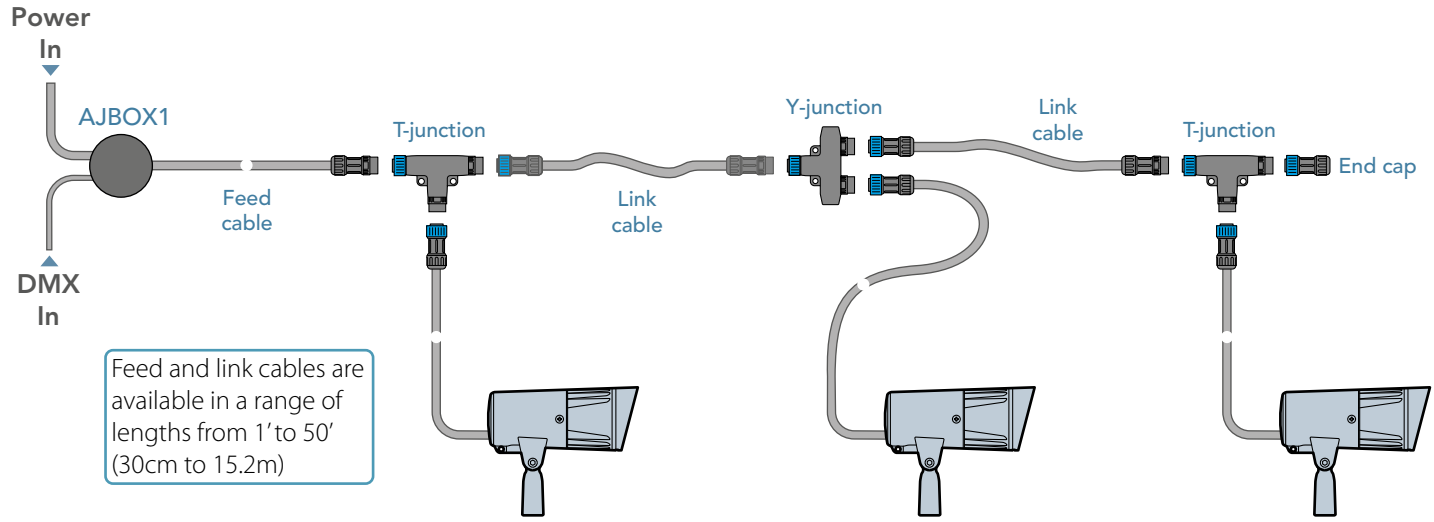

- Robust IP67-rated hybrid connectors are used throughout, each of which combines AC power and DMX control.
- All connectors are push-to-fit and twist-to-release.
- A simple color code is used throughout: Blue collars are inputs; black collars are outputs.

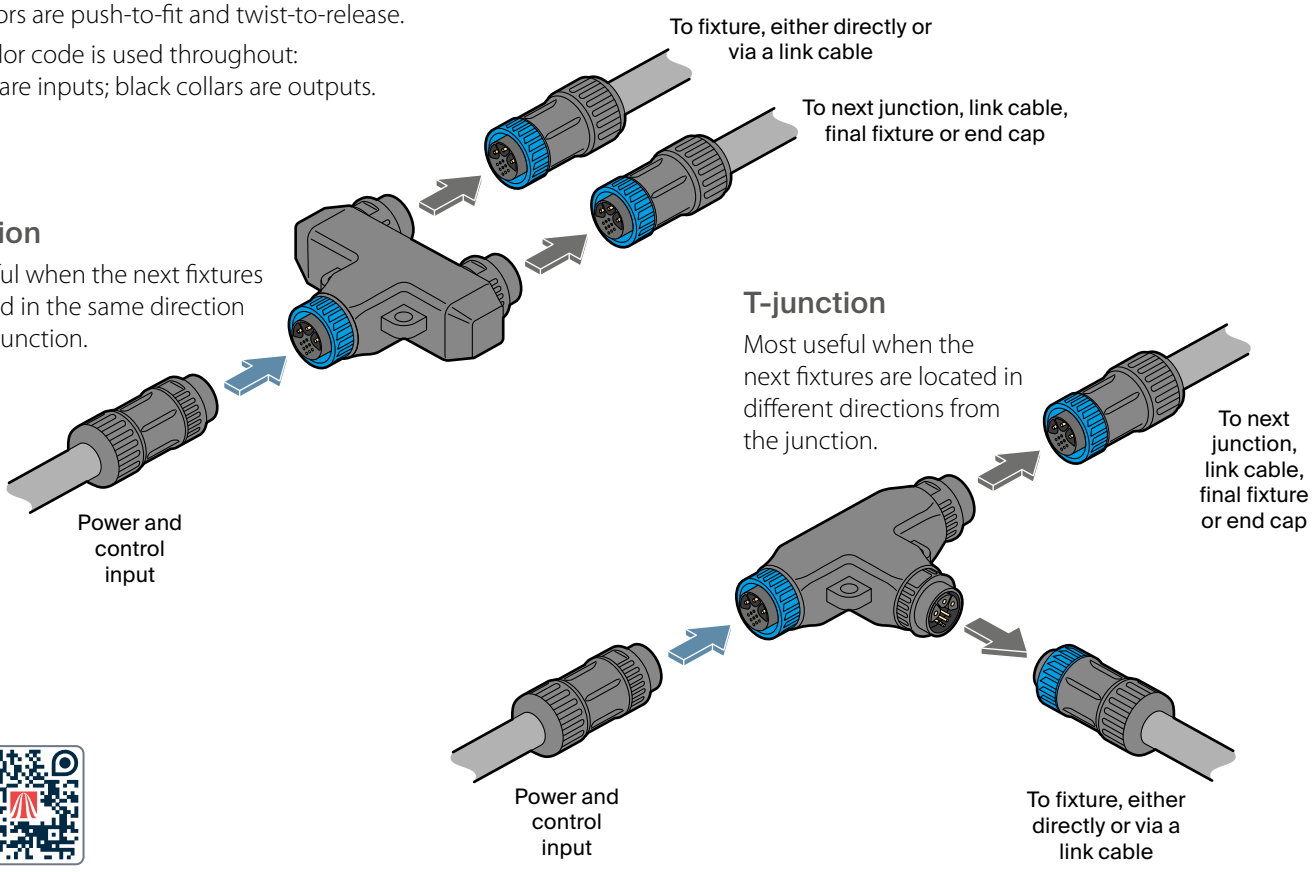

SCAN FOR PRODUCT PAGE

PROJECT | FIRM | ORDER # | TYPE | QTY

Important cabling considerations

- Wherever possible, cable runs should be positioned to make them beyond normal reach within any installation.
- For long cable runs, external runs and in areas where public contact and/or accidental damage is possible, the cabling should be contained within protective conduit. Minimum spec: Schedule 40, 1.5" (ID: Ø1.61", OD: Ø1.74").
- Additional power cabling: Where power feeds require extra cabling, the power cores should be 14 AWG minimum.
- Additional DMX control cabling: For initial control runs, these are recommended:
  - Indoor exposed or inside conduit above grade: . . . . . Belden 9842
  - Indoor plenum:. . . . . Belden 82842
  - Outdoor exposed, direct burial, or inside conduit below grade: . . . . . Belden 3107DB
- Suitable alternative cables must meet all of the following requirements:
  - Construction: Shielded, twisted pair (or multi-pair).
  - Impedance: Between 90 and 120Ω.
  - Capacitance: 15pF or less.
- Please consult and adhere to all relevant local codes.

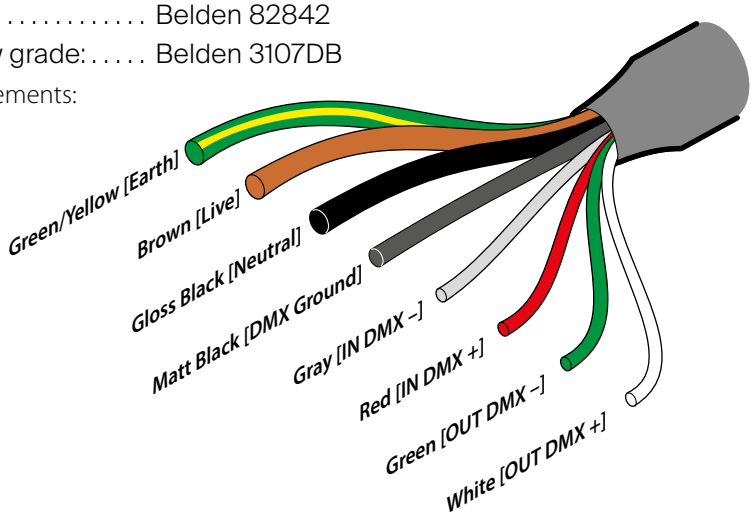

OutdoorLink system

See page 10 for details about the Acclaim Lighting **Outdoor Link System**

CONTROL

When connecting multiple fixtures, without the Outdoor Linking System options, connect the DMX control input lines to the first fixture and feed the output of that fixture to the next. The final fixture in the line should have a 120Ω terminating resistor connected between the DMX + and DMX – lines:

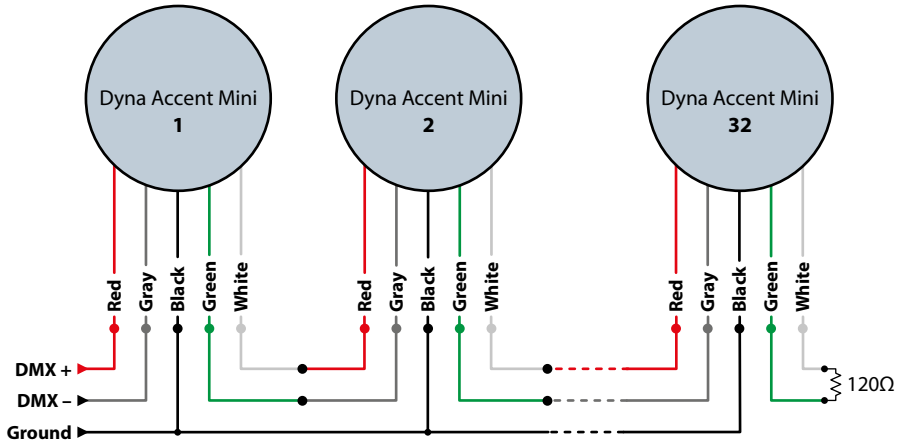

TIPS FOR ACHIEVING SUCCESSFUL DMX CONTROL

- Do not exceed a total cable length of 1,500 ft (457m) without buffering.
- Do not exceed a total of 32 fixtures on a single line without buffering.
- Use only connection cables with a characteristic impedance of 120Ω, preferably where the DMX + and DMX – data lines are twisted around each other and the ground link exists as a coaxial screen surrounding the inner cores.
- Connect a 120Ω terminating resistor between the DMX + and DMX – output connections of the final fixture.
- Do not introduce a passive Y-split into the control cabling. If it is necessary to split the control link in order feed fixtures located in different directions, use a powered DMX splitter/buffer.
- Ensure that the DMX + and DMX – connections do not become crossed at any point.

PROJECT | FIRM | ORDER # | TYPE | QTY

Alternative control inputs

Dyna Accent Mini fixtures use DMX as their native control method, however, it is possible to use other common control protocols when required, such as 0-10V (source or sink) or DALI.

Control inputs via converters

- DMX - connect a DMX input directly to the feed cable.
- 0-10V - use an Acclaim Lighting ZDM 6 to convert one or more analog control feeds into a combined DMX feed.
- DALI - use an Acclaim Lighting DDC-1-AC to convert one or more DALI channels into a combined DMX feed.

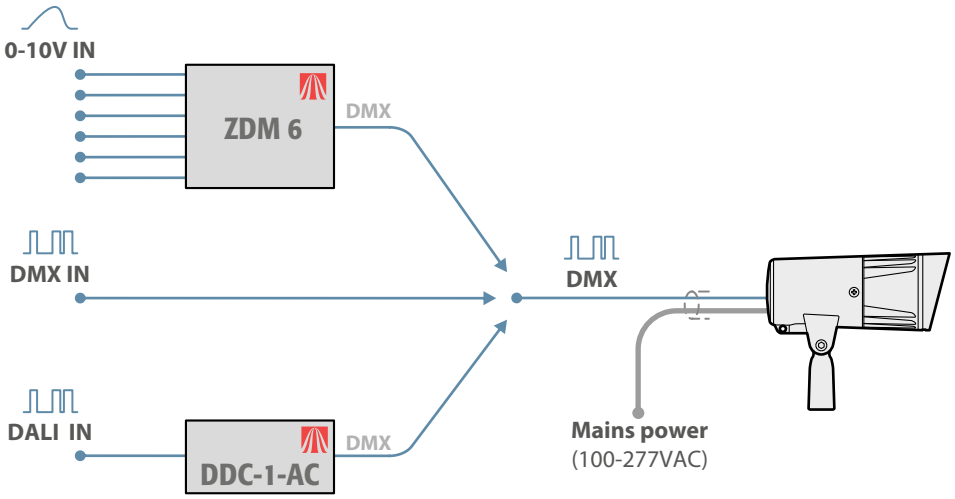

When using Acclaim Lighting ZDM 6 or DDC-1-AC modules it is possible to convert multiple inputs into separate DMX channels within a consolidated feed. The ZDM 6 can convert up to six 0-10V inputs into DMX channels, whereas the DDC-1-AC can convert a maximum of 64 DALI channels (although large numbers of channels are not recommended due to the timing limitations of the DALI standard).

Wireless DMX control

Each Dyna Accent Mini fixture contains an Aria X2 wireless DMX receiver as standard, which can greatly simplify the deployment of multiple fixtures in spaces that contain no control wiring infrastructure. A single Aria X2 transmitter can control many Dyna Accent Mini fixtures, at distances up to 2600 feet (792m).

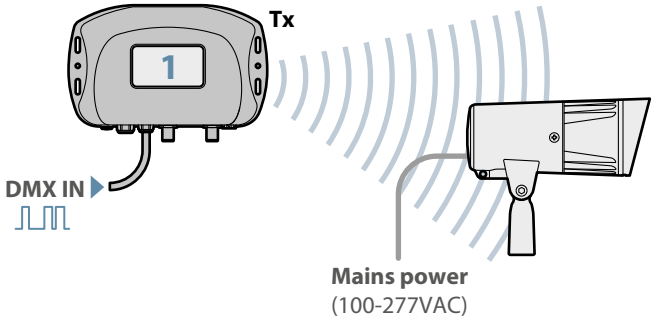

For full installation details, please refer to the **user guide**, available for free download here: