Aria X2™ System

Acclaim™

PROJECT	FIRM	ORDER #	TYPE	QTY

Aria X2™ is an innovative wireless control system engineered to unite your installation. A single Aria X2 transmitter can remotely orchestrate many devices, such as Aria X2 IPHD receivers that output DMX, Aria X2 IPHZ receivers that link to 0-10V devices, or the expanding range of Acclaim Lighting fixtures that are directly Aria X2 compatible. Multiple frequency bands are available on each unit to provide optimal operation in a range of installation conditions and all units are housed in tough IP66-rated enclosures for all weather protection.

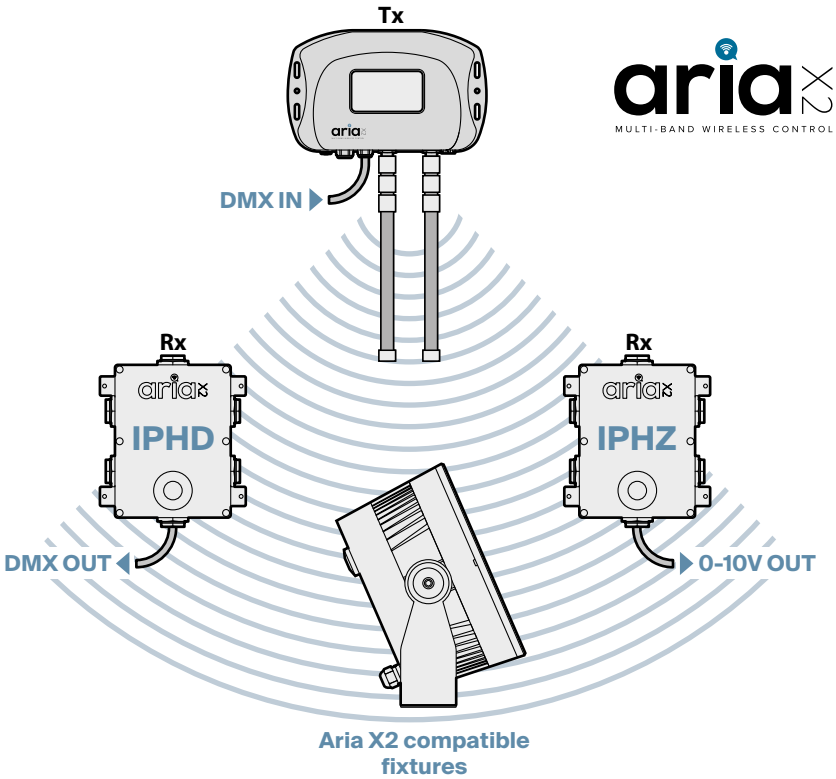

At a glance

Power input	Range	Temperature	Protection	Wireless protocols		
100 to **277**VAC **50/60**Hz	Up to **2000 feet** (**610m**)	**-40° F** to **122° F** **-40° C** to **50° C**	Ingress: **IP66** (wet location)	**ZigBee** (2.4GHz to 2.5GHz)	**Bluetooth** (2.4GHz to 2.5GHz)	**Sub-GHz** (866MHz to 924MHz)

Order codes

AX2IPHT	Aria X2 IPH transceiver
AX2IPHB	Aria X2 IPH bridge (communicates to X2 and legacy SM220 receivers)
AXIPHXDR	Aria X2 IPHD receiver with DMX output in a tough JBOX casing
AXIPHXZR	Aria X2 IPHZ receiver with 0-10V output in a tough JBOX casing

SCAN FOR PRODUCT PAGE

PROJECT	FIRM	ORDER #	TYPE	QTY

Specifications

Power input	100-277VAC, 50/60Hz
Maximum power consumption	1.7W @ 120VAC, 2.1W @ 230VAC
Wireless protocols	Zigbee: 2405 to 2480MHz Bluetooth: 2402 to 2480MHz Sub-GHz: 866.6MHz plus 906 to 924MHz
Estimated transmission range	Clear line of sight: 2000 feet (610m) Through obstructions: 300 feet (91m)
DMX universes	One per transceiver set, maximum of 8 simultaneously
Max number of receivers	200 (to ensure optimum data transmission)
System security	Password protection
Ambient temperature range	-40° F to 122° F (-40° C to 50° C)
Ingress protection	IP66, wet location (not including cable end feeds)
Housing	Die cast aluminum
Dimensions	See pages 4 and 5
Certifications	FC ETL CE UK CA

Aria X2 frequency bands

The Aria X2 standard provides a choice of three separate wireless frequency bands:

- **2.4GHz** - *(2404-2480MHz)* - This licence-free radio band is approved for use in most countries worldwide and provides good results in most areas. *Note: The X2 2.4GHz band is not supported by the first generation (single band) Aria transmitters.*
- **900MHz (NA)** - *(902-928MHz)* - This licence-free radio band is approved for use across the Americas, Greenland and some of the eastern Pacific Islands (see map below), overseen by the FCC. This option can only be used in countries located within **ITU Region 2**.
- **900MHz (EU)** - *(863-870MHz)* - This licence-free radio band is approved for use across the Europe, Africa, the Commonwealth of Independent States, Mongolia and the Middle East west of the Persian Gulf, including Iraq (see map below). This option can only be used in countries located within **ITU Region 1**.

Choosing the appropriate frequency band

The **2.4GHz** band provides good results, particularly for outdoor installations. However, this frequency range can become congested in areas where other devices, particularly Wi-Fi equipment are also in use. You are advised to use the 2.4GHz band unless you encounter frequency congestion or issues interference by obstacles.

If your installation is located in ITU regions 1 or 2, then the **Sub-GHz (900MHz)** bands become a possible alternative. Their lower frequency, longer wavelength transmission characteristics can provide improved obstacle penetration than the 2.4GHz band and they can be advantageous for indoor installations where Wi-Fi use is prevalent. Both Sub-GHz bands are susceptible to interference from other license-exempt transmitting devices using the same frequency space.

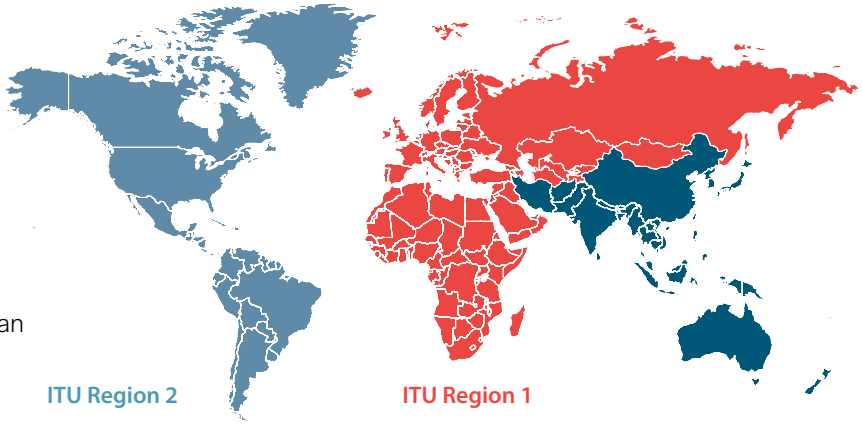

Mixing Aria Gen 1 (SM220) and Aria X2 devices

Some older Acclaim Lighting fixtures (such as Dyna Drum SO, Cylinder One HO, etc) have built-in Aria Gen 1 (SM220) receivers, which are not directly compatible with Aria X2 transmitters. If older fixtures need to be wirelessly controlled alongside Aria X2 fixtures, then you will need to install an Aria X2 IPH Bridge. This multi-function device can output the original Aria SM220 (2.4GHz) signal at the same time as an Aria X2 signal: either at 2.4GHz or using a Sub-GHz band.

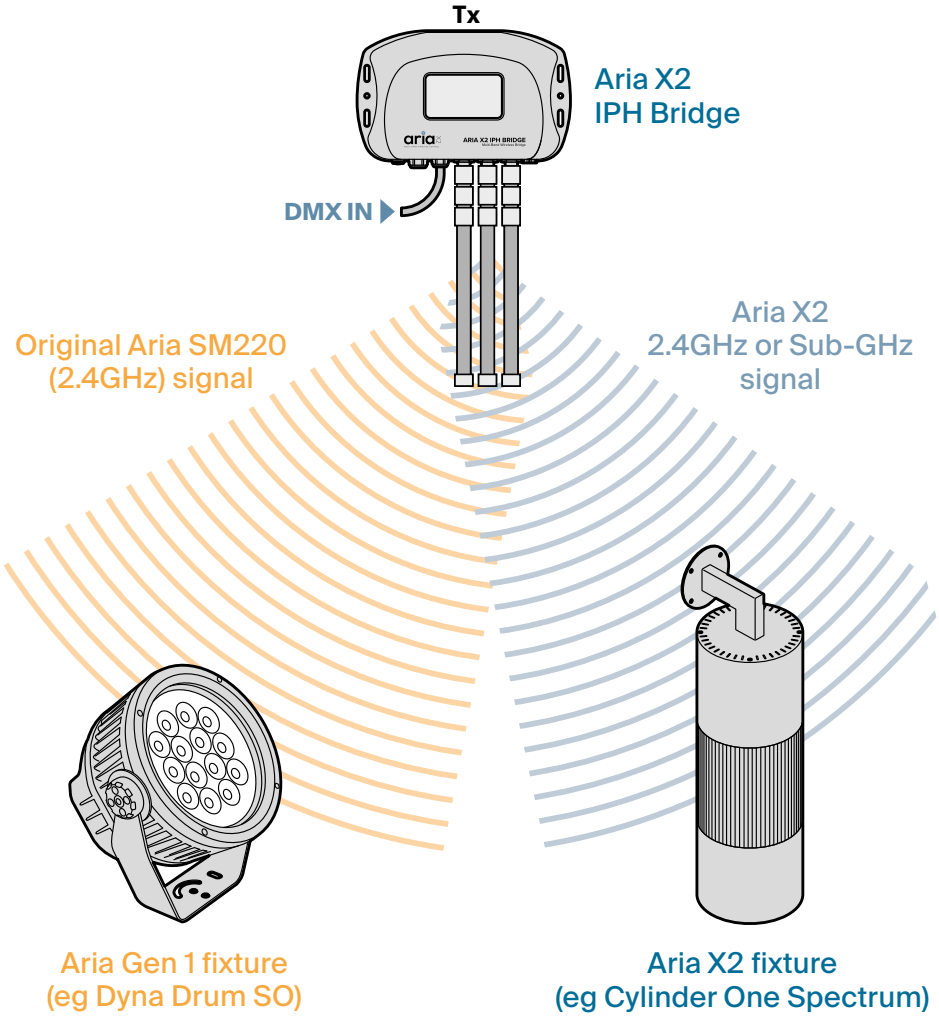

Always carry out a spectrum analysis

Prior to using the Aria™ X2 wireless feature, we strongly recommend that you perform a spectrum analysis of the on site radio frequencies to ensure the system will function correctly at the planned location.

PROJECT	FIRM	ORDER #	TYPE	QTY

Dimensions

IPH transceiver (and bridge)

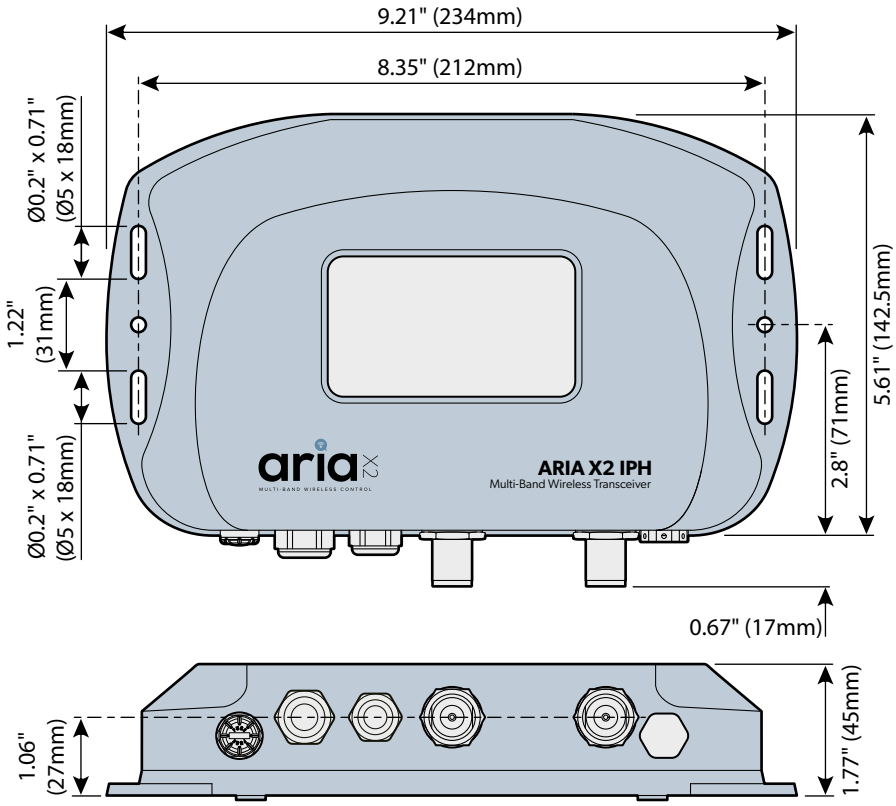

Weights

IPH Transceiver: 2.97 lbs (1.35kg)

IPH Bridge: 3.13 lbs (1.42kg)

Antenna and bracket

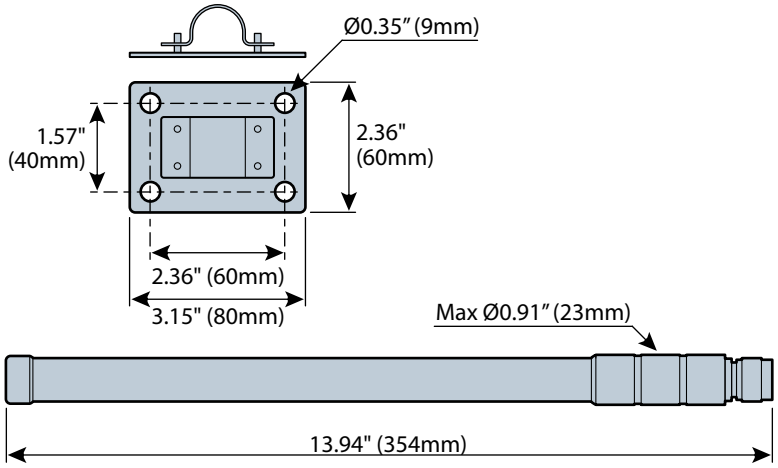

Weights

2.4GHz antenna: 5.2oz (149g)

900MHz antenna: 4.72oz (134g)

Bracket & U-bolts: 8.46oz (240g)

PROJECT	FIRM	ORDER #	TYPE	QTY

Dimensions

IPHD and IPHZ receivers

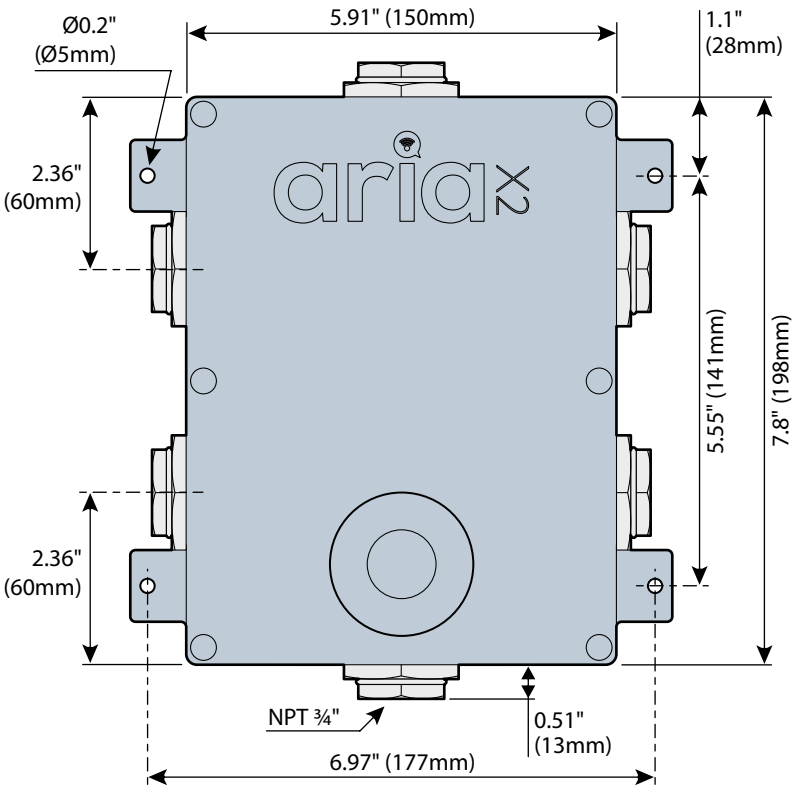

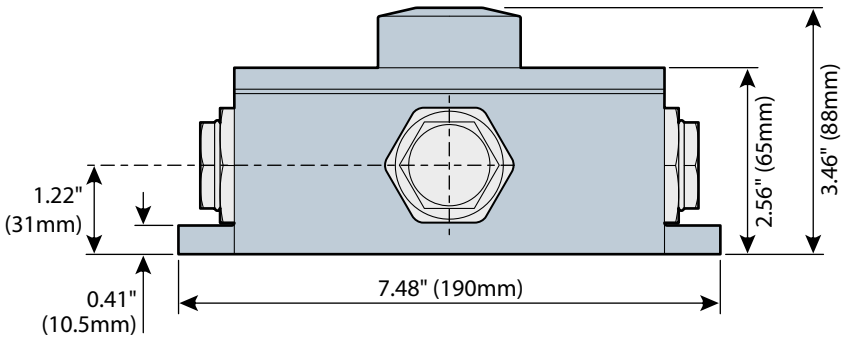

Weight: 5.04 lbs (2.29kg)

For full installation details, please refer to the **user guide**, available for free download here: