Aqua Linear™

Acclaim™

PROJECT	FIRM	ORDER #	TYPE	QTY

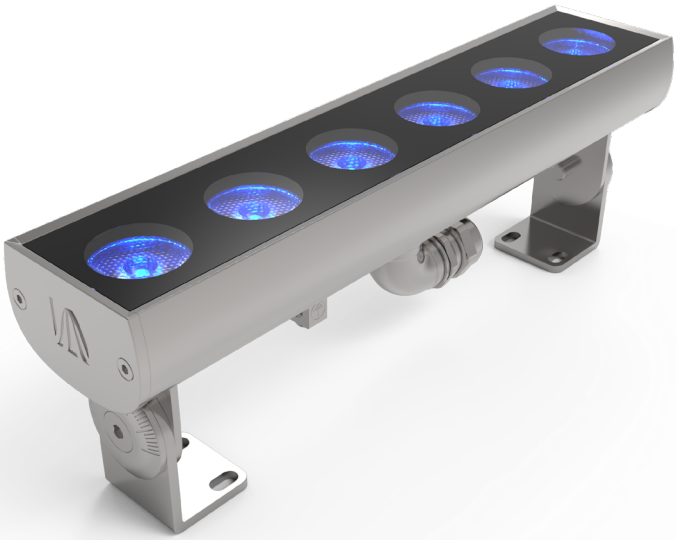

Aqua Linear™ fixtures are high output, submersible LED fixtures, fully rated for use in pool environments down to a depth of 20 feet (6m). A range of emitter types, lenses and beam shaping options make these fixtures particularly suited for exterior façade washing as well as fountain, pond and landscape applications.

Two length options (1' and 4') are available, both featuring sturdy mount brackets that allow the fixture to be rotated 90° from vertical in either direction. Each fixture is supplied pre-fitted with a STOW (**S**ervice, **T**hermoplastic, **O**il and **W**ater resistant) cable (up to 100' / 30.5m) ready for long term installation in the most testing environments.

Up to four Aqua Linear fixtures can be fed from a single Aqua Driver 4 unit under DMX/RDM control (or 0-10V / DALI using optional signal converters - see page 11).

At a glance

Optics

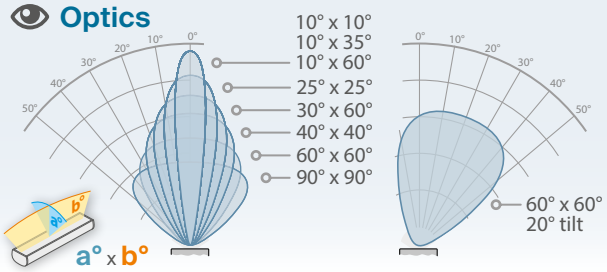

Emitters

Fixed White (2400K, 2700K, 3000K, 3500K or 4000K) *or* **Dynamic White (DW)** (2400K to 5500K) *or* ***Q* RGBL** with ***CCT Select*** (1800K to 6000K) *or* ***Q* RGBA**

Depth

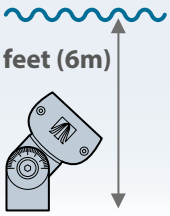

Power

Low voltage: **24VDC** via Aqua Driver 4

Temperature

-40° F to **131° F**
-40° C to **55° C**

Protection

Ingress: **IP68**
Impact: **IK08**
Vibration: **3G**

Output

Up to **1,517** lumens per linear foot

Material

316L stainless steel suitable for freshwater, chlorinated, brominated and saltwater pools

Configure your product

AL - 26 -

Example final code: ***ALI-260-AHED***

Connector:
I = Standard
K = Pool & Spa
See page 8

Internal louver:
0 = None
1 = Honeycomb*
** reduces output by 40%*

Size:
A = 1' (305mm)
D = 4' (1220mm)

Optics:
C = 10° x 10°
F = 25° x 25°
H = 40° x 40°
K = 60° x 60°
L = 90° x 90°
U = 10° x 35°
R = 10° x 60°
Q = 30° x 60°
T = 60° x 60° + 20° tilt left
X = 60° x 60° + 20° tilt right

Emitters:
C = 2400K
D = 2700K
E = 3000K
F = 3500K
G = 4000K
L = RGBL
T = RGBA
X = DW (2400K-5500K)

Cable length:
A = 5' (1.5m)
B = 10' (3m)
C = 25' (7.6m)
D = 50' (15.2m)
E = 75' (22.8m)
F = 100' (30.5m)

SCAN FOR PRODUCT PAGE

PROJECT	FIRM	ORDER #	TYPE	QTY

Specifications

Emitters	2400K, 2700K, 3000K, 3500K, 4000K, DW (2400K-5500K), RGBA or RGBL with CCT Select (1800K-6000K) - *see page 10*
Optics	10° x 10°, 25° x 25°, 40° x 40°, 60° x 60°, 90° x 90°, 10° x 35°, 10° x 60°, 30° x 60°or Asymmetric wall wash (60° x 60°, 20° tilt) - *see page 9*
Output	Up to 1,517 lumens per foot
Lumen maintenance	L_{70} 90,000 hours (@ 25° C)
Control	0-100% dimming through DMX (via Aqua Driver 4). Use optional converters for 0-10V or DALI
Fixtures per driver	Four fixtures per Aqua Driver 4 (Standard or Pool & Spa variants)
Operating voltage	24VDC. Aqua Driver 4 requires 100-277VAC, 50/60Hz
Power consumption	Submersible mode: 18W per foot Non-submersible mode: 9W per foot *(see page 11)*
Connection	Attached STOW cable (6 x 16AWG), various cable length options available
Mounting	Integrated 180° swivel mounting brackets included
Material	316L stainless steel body, glass top lens
Finish	Stainless steel, suitable for freshwater, chlorinated, brominated and saltwater pool environments*
Ambient temperature range	-40° F to 131° F (-40° C to 55° C)
Ingress protection	IP68, submersible to 20' (6m)
Impact protection	IK08, protection against 5 joule impact (40cm distance) - walk over rated
Vibration protection	ANSI C136.31, 3G-rated for high vibration and bridge applications
Warranty	5 years, limited
Weight	**1'**: 8.8 lbs (4.0kg) **4'**: 33.1 lbs (15.0kg)
Dimensions	See page 5
Certifications	Intertek, FC, CE, UK CA, 3G LUMINAIRE VIBRATION, RoHS COMPLIANT — ** not rated for ocean or seawater immersion.*

Photometrics

For all available IES files, please visit acclaimlighting.com/products/aqua-linear

Optics	4000K Lumens	Center Candela	Efficacy (lm/W)
10° x 10°	1,382	13,972	80
25° x 25°	1,517	7,957	87
40° x 40°	1,496	3,049	86
60° x 60°	1,452	1,840	85
90° x 90°	1,491	701	85
10° x 35°	1,462	7,411	84
10° x 60°	1,344	3,795	77
30° x 60°	1,312	1,645	75
60° x 60° + 20° tilt	1,265	650	63

To calculate outputs for other emitters

The table left shows the photometric test results for a Aqua Linear fixture fitted with 4000K white emitters in combination with each of the various optic options. To calculate the lumen output for any other emitter type, take the **4000K lumens** value for the required optic and multiply it by one of the following:

- 2400K 0.736
- 2700K 0.880
- 3000K 0.935
- 3500K 0.970
- RGBL 0.755
- RGBA 0.753
- DW 0.954

Related components

Drivers

Aqua Driver 4 - Standard

100-277VAC 50/60Hz input. Connect up to four Aqua Linear 1' or 4' fixtures. Uses hardwire terminal blocks for landing fixture connections within a dry location. AquaSense technology automatically configures the current requirements of the connected fixtures at power up.

Part # **AQDR4S**

Aqua Driver 4 - Pool & Spa

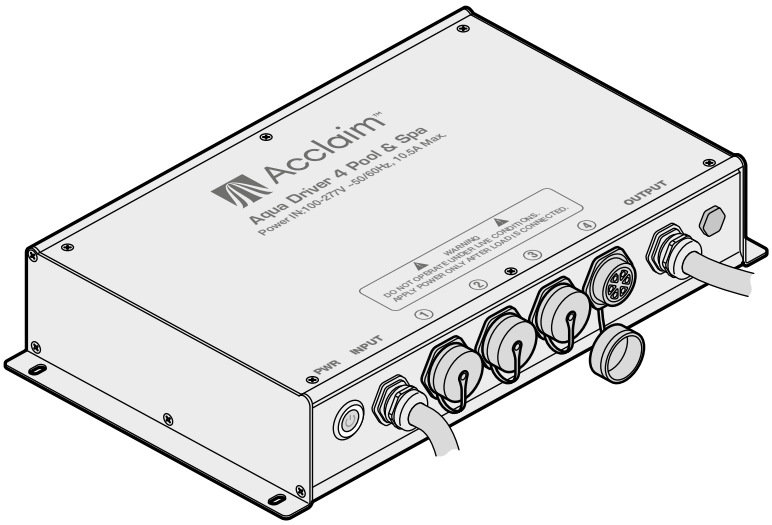

100-277VAC 50/60Hz input. Connect up to four Aqua Linear 1' or 4' fixtures via IP68-rated 6-way connectors for mounting within pool and spa areas. AquaSense technology automatically configures the current requirements of the connected fixtures at power up.

Part # **AQDR4P**

Signal converters (see page 12)

0-10V

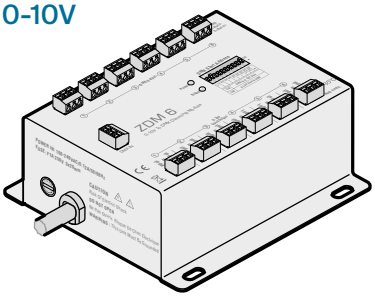

Multi-channel (0-10V) converter **ZDM6**

DALI

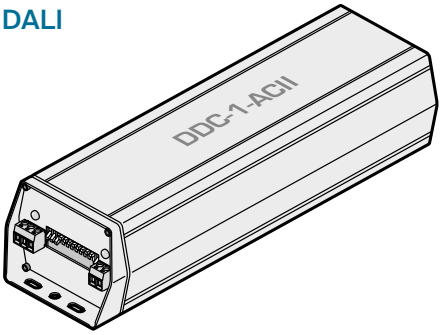

DALI 2 (DT6 & DT8) 64 channel converter **DDC 1 AC**

Test and configuration tool kit

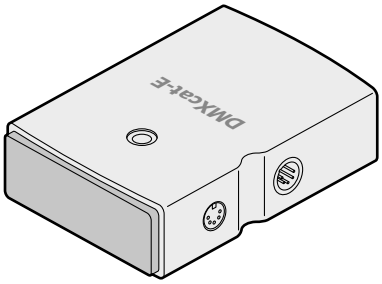

DMX/RDM, ArtNet, sACN, SMPTE LTC and Midi test/configuration tool **DMXcat-E**

SCAN FOR PRODUCT PAGE

Related components

Beam accessories

Single-sided glare shields

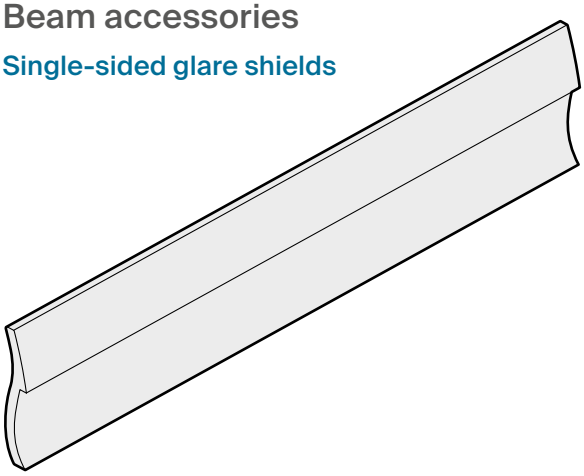

1' **ALIGS1**
4' **ALIGS4**

Half louvers

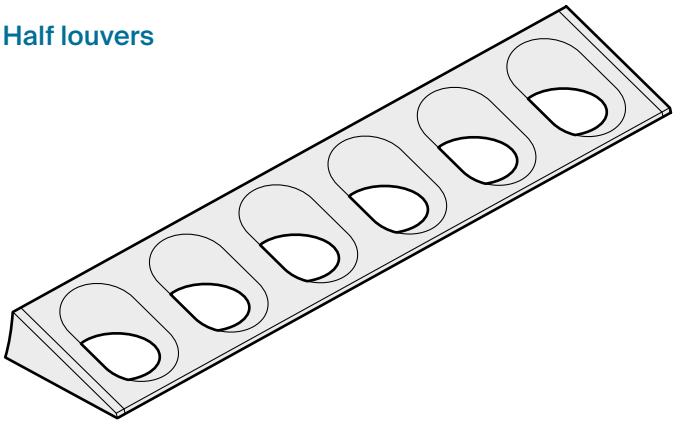

1' **ALIHLV1**
4' **ALIHLV4** *(comprises four 1' sections)*

Full louvers

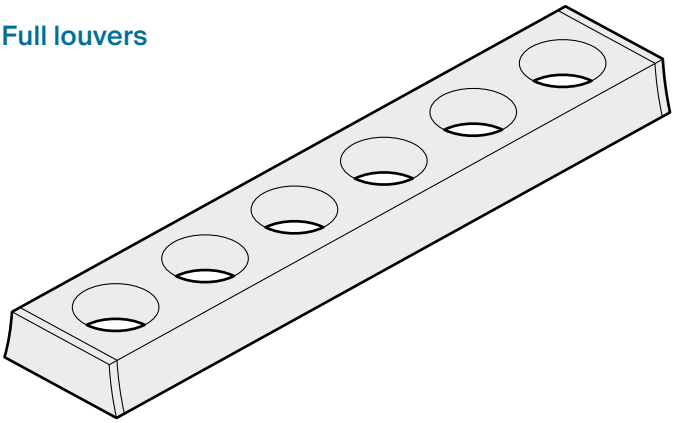

1' **ALIFLV1**
4' **ALIFLV4** *(comprises four 1' sections)*

SCAN FOR PRODUCT PAGE

Dimensions

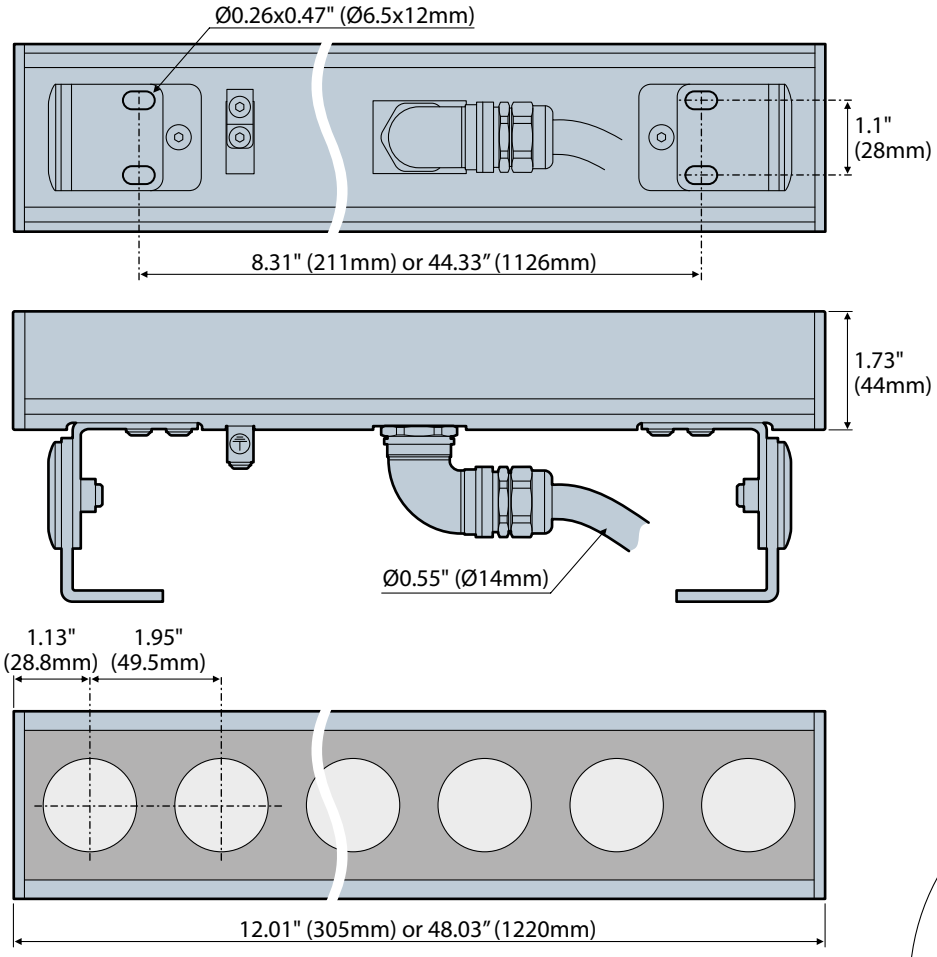

IP68 (Pool & Spa option) plug and cable

Heads using the Standard option use the same cable type but have removable connectors

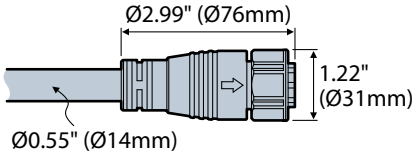

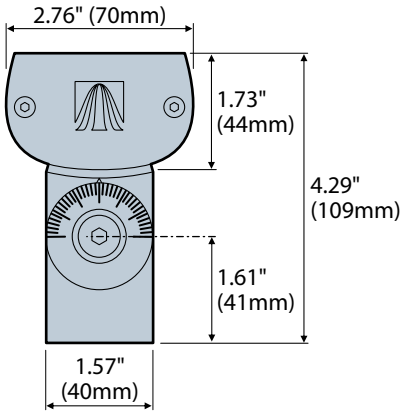

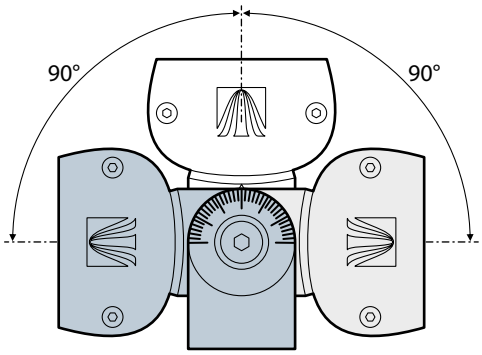

Weights: **1':** 8.8 lbs (4.0kg)
4': 33.1 lbs (15.0kg)

With optional glare shield, half louver or full louver

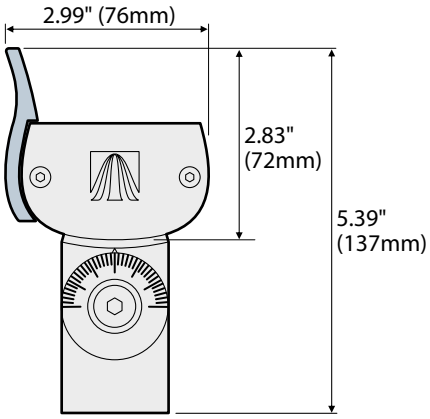

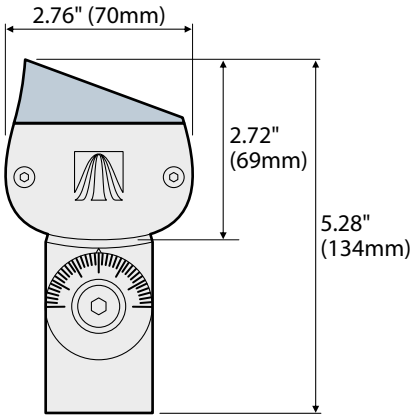

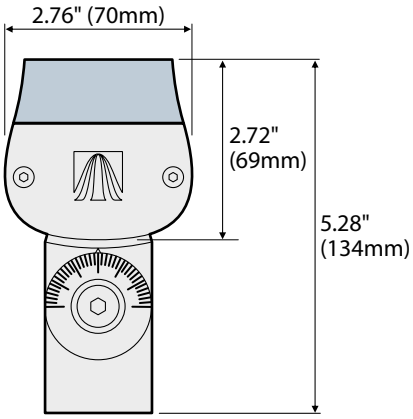

Dimensions

Aqua Driver 4 Standard

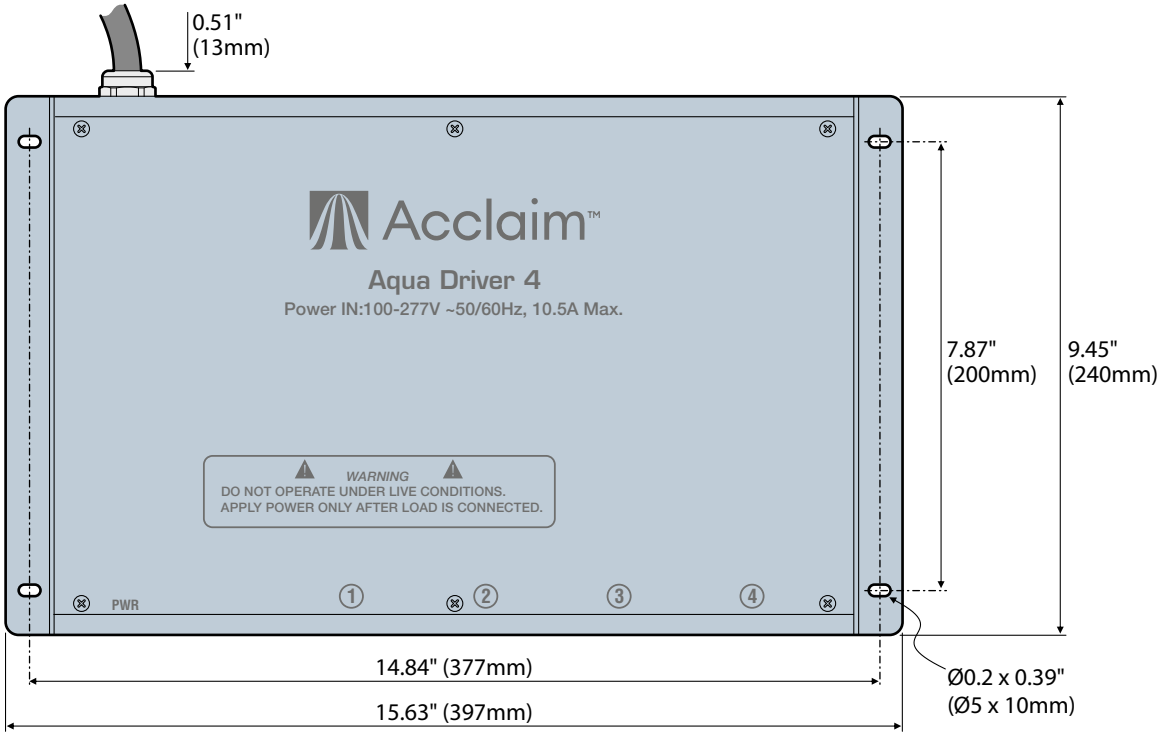

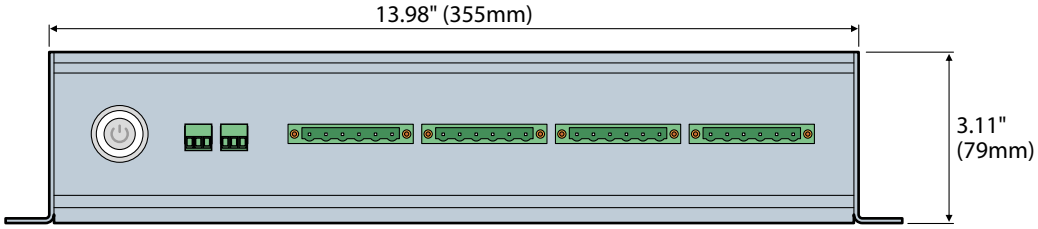

Weight: 10.58 lbs (4.8kg)

Note: Mixtures of Aqua-series heads can be mixed on a single Aqua Driver 4, e.g. Aqua Drum E3, Aqua Drum S3, Aqua Linear 1' and Aqua Linear 4' can all be driven from the same unit if required. All heads connected to the driver must have the same emitter options.

SCAN FOR PRODUCT PAGE

Dimensions

Aqua Driver 4 Pool & Spa

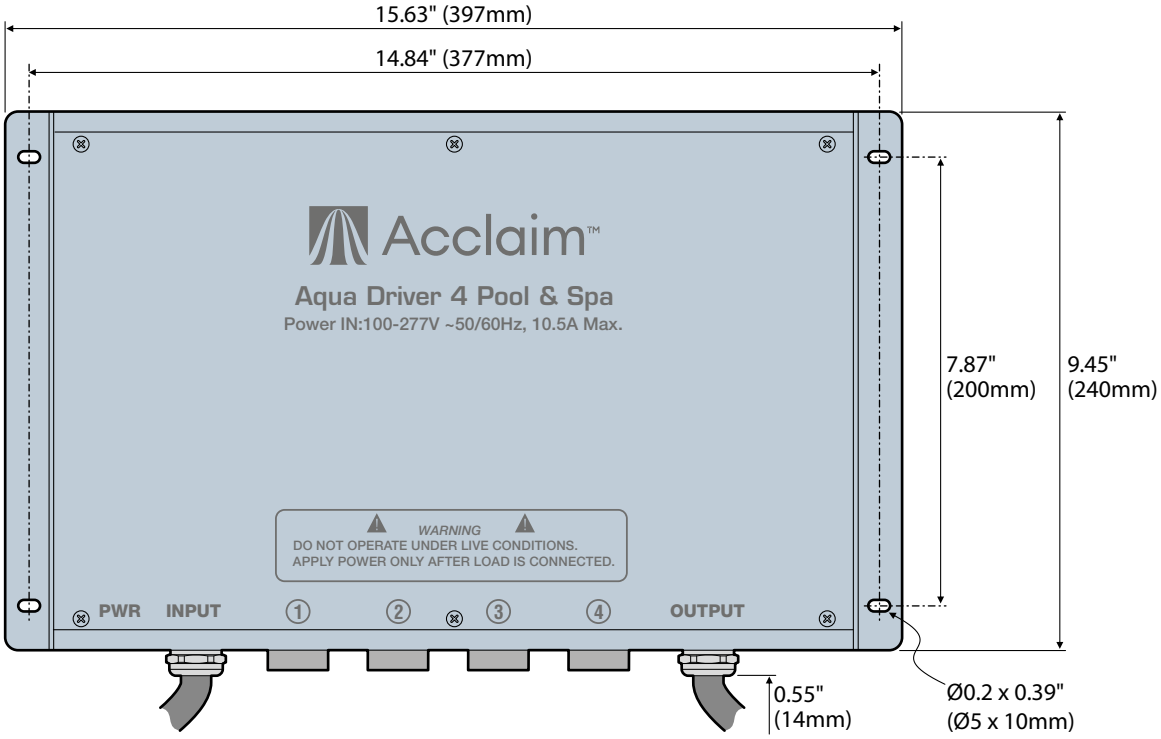

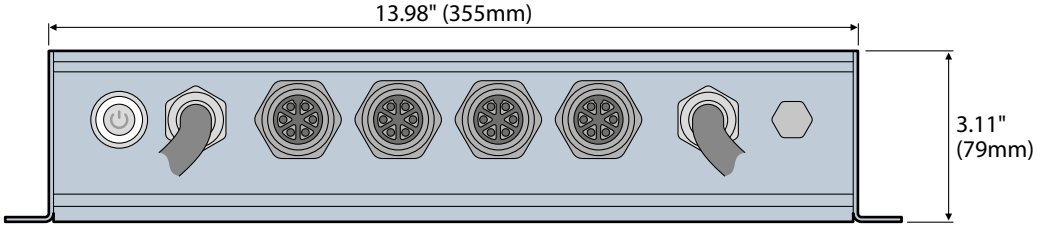

Weight: 12.12 lbs (5.5kg)

Note: Mixtures of Aqua-series heads can be mixed on a single Aqua Driver 4, e.g. Aqua Drum E3, Aqua Drum S3, Aqua Linear 1' and Aqua Linear 4' can all be driven from the same unit if required. All heads connected to the driver must have the same emitter options.

SCAN FOR PRODUCT PAGE

Head connector types

The two variants of Aqua Driver 4 use differing output sockets to suit the mounting locations of the driver units. Accordingly, each Aqua Linear head can be ordered with corresponding plugs to match the chosen driver variant: Standard (head connector option 'I') or Pool & Spa (head connector option 'K').

Aqua Driver 4 - Standard: terminal block head connectors

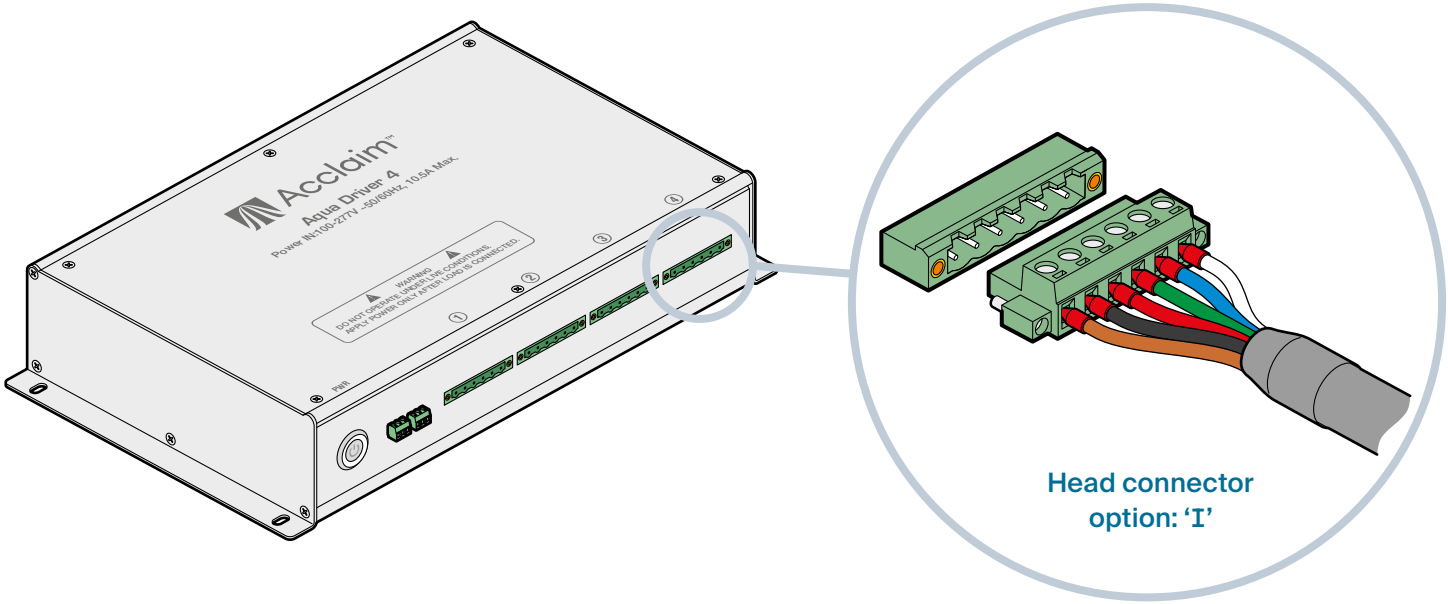

Aqua Driver 4 - Pool & Spa: IP68 head connectors

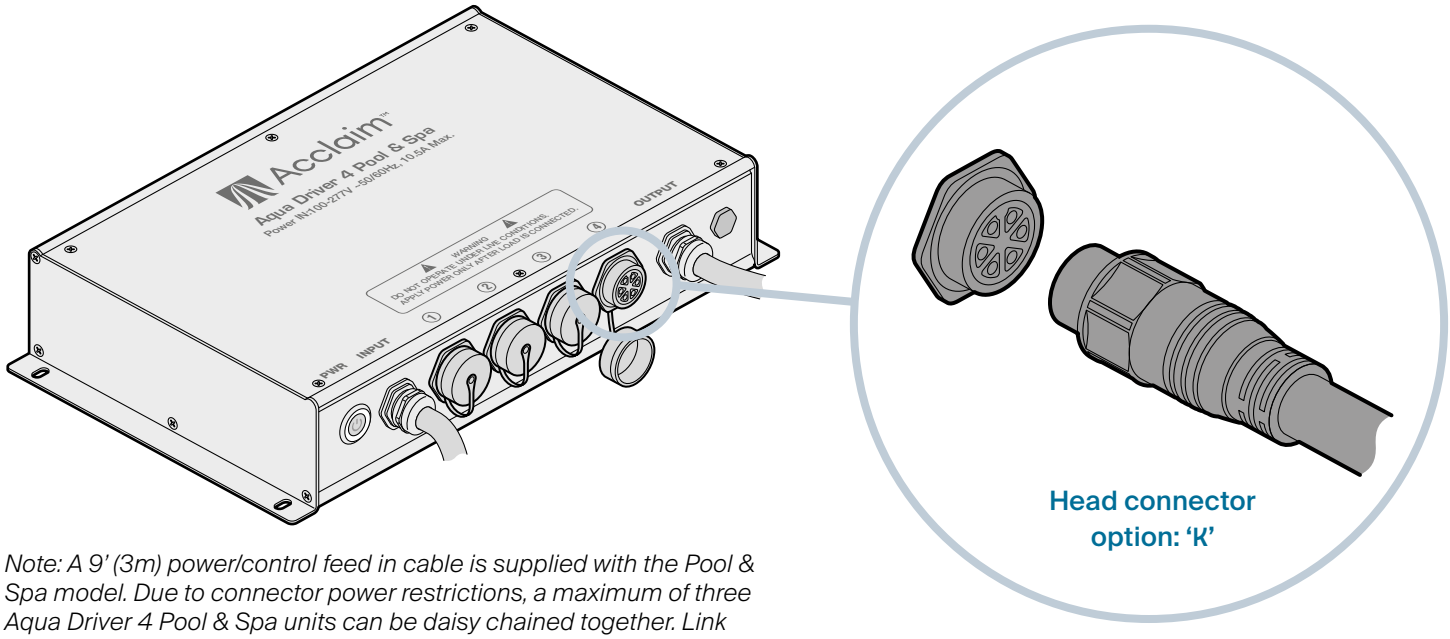

Note: A 9' (3m) power/control feed in cable is supplied with the Pool & Spa model. Due to connector power restrictions, a maximum of three Aqua Driver 4 Pool & Spa units can be daisy chained together. Link cables and terminators are available for use with the output connection.

Asymmetric wall wash lens options

Two special lens options are available, both of which provide a 20 degree side-bias to the direction of the emitted output. Both lens options produce a 60 x 60 degree main beam angle; the difference is whether those beams are biased to the left or to the right of the fixture, in relation to the feed in connection.

Asymmetric Wall Wash Right (60° x 60° with 20° tilt)

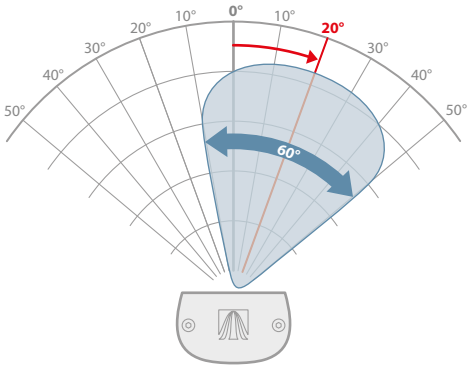

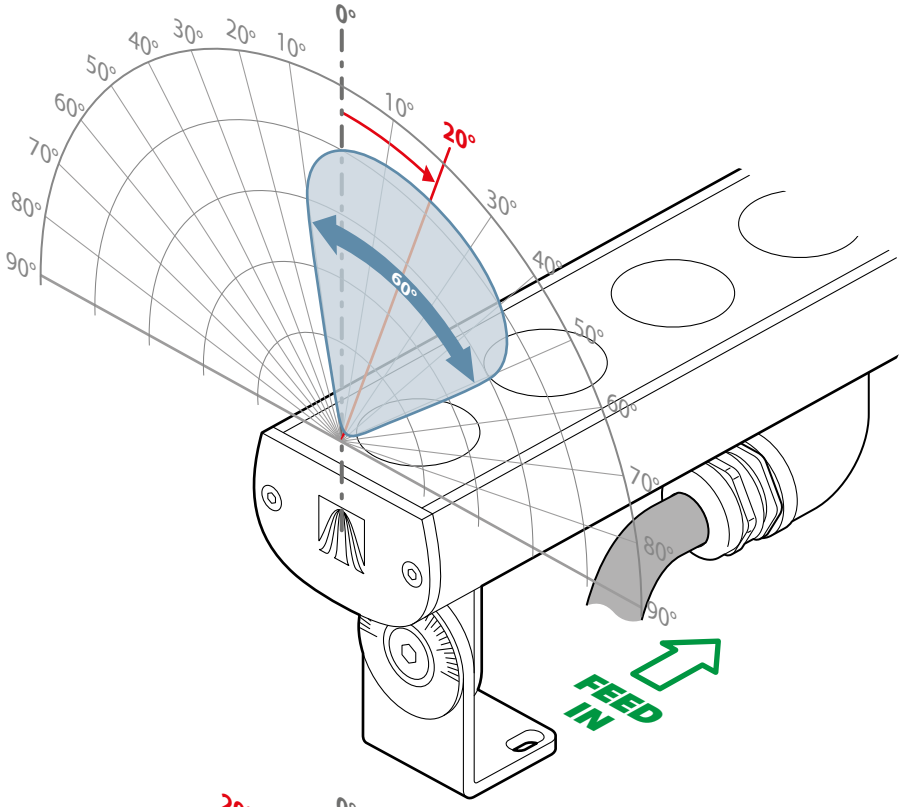

Asymmetric Wall Wash Left (60° x 60° with 20° tilt)

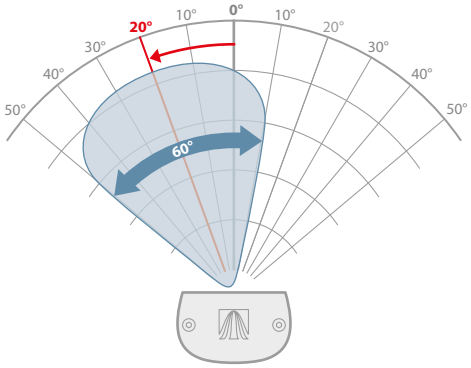

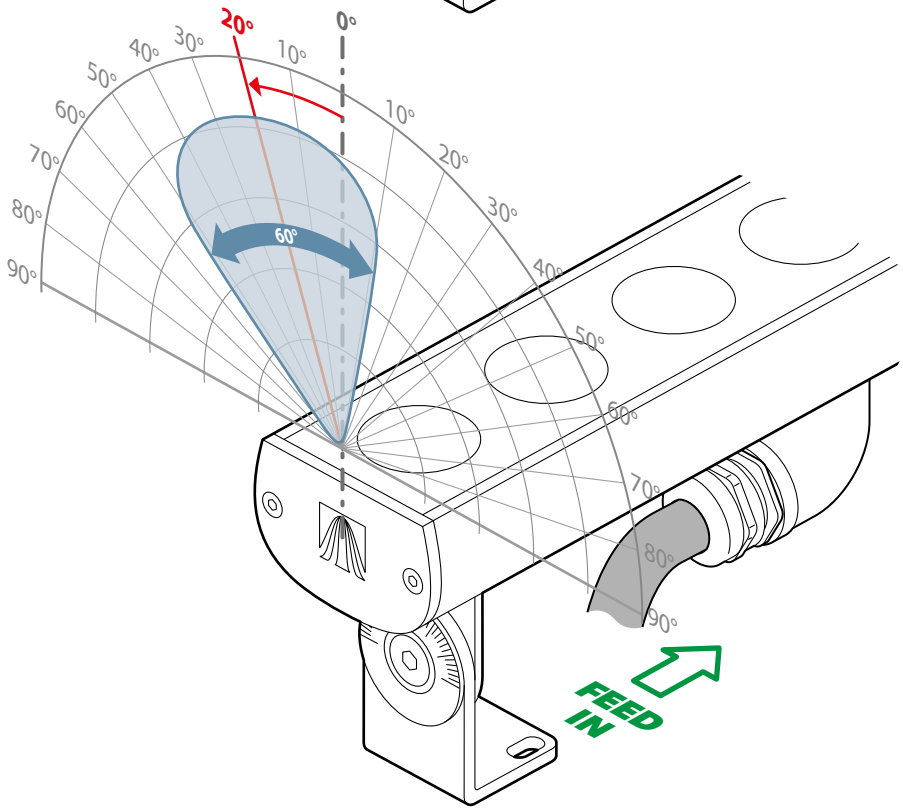

CCT Select color mixing

Aqua Linear fixtures fitted with RGBL (QL) emitters allow you to mix saturated and pastel colors in addition to calling up any color temperature of white (using a dedicated DMX control channel). The special mode uses six channels to provide full control over the RGBL emitters.

Mixing saturated and pastel colors individually

Use DMX channels 1 to 4 to mix the required shade.

Use channel 6 to determine the overall output intensity.

*Note: **Channel 5** must be at **zero**.*

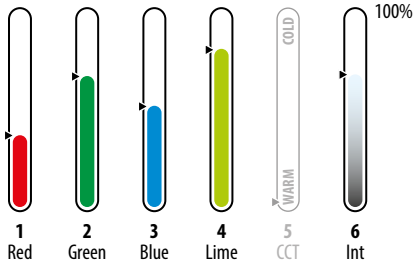

Choosing a temperature of white

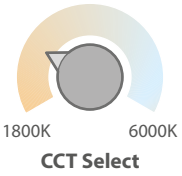

Use DMX channel 5 to select the required correlated color temperature (CCT) ranging from 1800K (at 1%) to 6000K+ (at 100%).

Use channel 6 to control the overall output intensity.

Note: When channel 5 receives any value other than zero, the input values of channels 1 to 4 will be ignored.

Note: A full list of DMX values for each color temperature are provided in the Aqua Series gen 3 user guide.

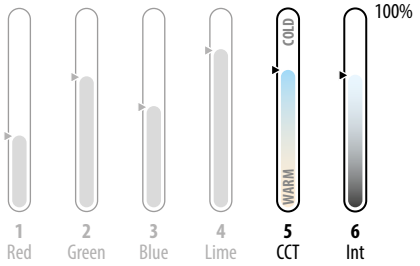

DMX value	Color temp
0	Off
001-004	1800K
005-008	1900K
009-012	2000K
013-016	2100K
017-020	2200K
021-024	2300K
025-028	2400K
029-032	2500K
033-036	2600K
037-040	2700K
041-044	2800K
...	...

Single channel tungsten emulation

(Ai Dim to Warm)

In addition to the multi-channel control modes mentioned above, Aqua Linear fixtures fitted with RGBL (QL) emitters also offer a simple one channel option. As the single channel is raised from zero to 100% and back to zero, the fixture responds with combined graduations of both intensity and color temperature to skilfully emulate the dimming response of a typical high-output tungsten source.

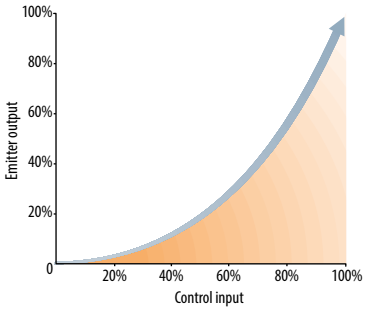

Ai Dim technology

Alternate power modes

To obtain the best possible performance, every Aqua Driver 4 can be configured in either 'Dry' or 'Wet' modes to reflect the positioning of the connected fixtures. In 'Dry' or non-submerged mode, the fixtures are scaled by 50% to ensure their emitters remain within the correct thermal envelope. When fixtures are fully submerged then 'Wet' mode can be invoked to remove the scaling and boost output. These changes are enacted by altering the pulse width modulation (PWM) patterns that control emitter dimming rather than adjusting the LED drive current; this ensures consistency in color mixing and color temperatures between modes.

Alternative control inputs

Aqua Driver/Aqua Linear fixtures use DMX as their native control method, however, it is possible to use other common control protocols when required, such as 0-10V (source or sink) or DALI.

Control inputs via converters

- DMX - connect a DMX input directly to the feed cable.
- 0-10V - use an Acclaim Lighting ZDM 6 to convert one or more analog control feeds into a combined DMX feed.
- DALI - use an Acclaim Lighting DDC-1-AC to convert one or more DALI channels into a combined DMX feed.

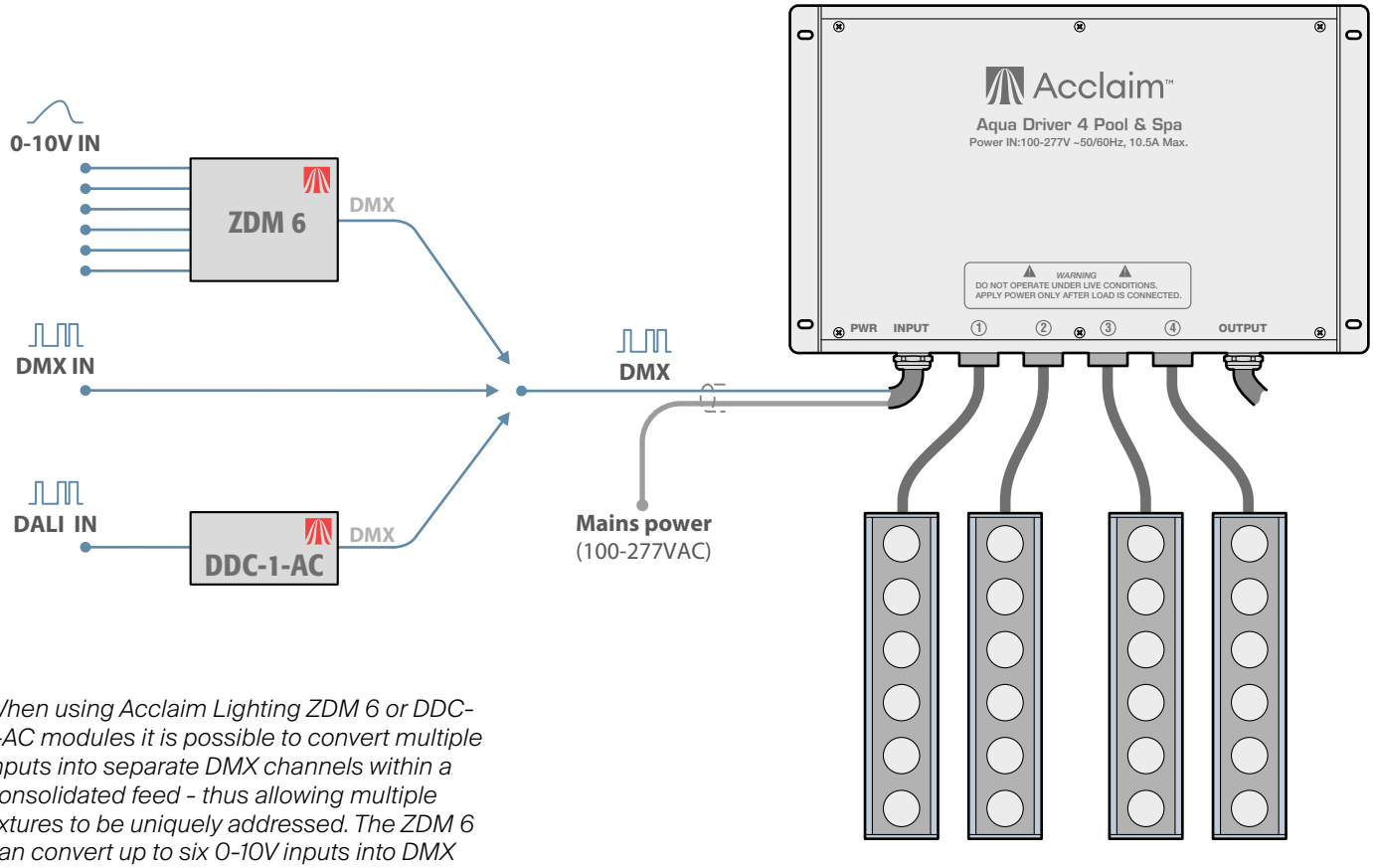

When using Acclaim Lighting ZDM 6 or DDC-1-AC modules it is possible to convert multiple inputs into separate DMX channels within a consolidated feed - thus allowing multiple fixtures to be uniquely addressed. The ZDM 6 can convert up to six 0-10V inputs into DMX channels, whereas the DDC-1-AC can convert a maximum of 64 DALI channels (although large numbers of channels are not recommended due to the timing limitations of the DALI standard).

Note: Mixtures of Aqua-series heads can be mixed on a single Aqua Driver 4, e.g. Aqua Drum E3, Aqua Drum S3, Aqua Linear 1' and Aqua Linear 4' can all be driven from the same unit if required. All heads connected to the driver must have the same emitter options.

For full installation details, please refer to the **user guide**, available for free download here: